Walli

Outlet-Control type F

Remote control of electrical devices in Z-Wave network

Compatible with Yubii® ECOSYSTEM

EN - Instructions and warnings for installation and use

v1.4

Nice

1 WARNINGS AND GENERAL PRECAUTIONS

- **This manual contains important instructions and warnings for personal safety.** Carefully read all parts of this manual. If in doubt, suspend installation immediately and contact Nice Technical Assistance.
- **Using this product for different purposes than specified in this manual is strictly forbidden!**
- **All installation and connection operations must be performed exclusively by suitably qualified and skilled personnel with the unit disconnected from the mains power supply.**
- The product packaging materials must be disposed of in full compliance with local regulations.
- Never apply modifications to any part of the device. Operations other than those specified can cause malfunctions. The manufacturer declines all liability for damage caused by makeshift modifications to the product.
- Never place the device near the sources of heat or expose to naked flames. These actions can damage the product and cause malfunctions.
- The device is designed to operate in an electrical home installation. Faulty connection or use can result in a fire or electric shock.
- Even when the device is turned off, voltage can be present at its terminals. Any maintenance introducing changes to the configuration of connections or the load must be always performed with a disabled fuse.
- To avoid risk of electrical shock, don't operate the device with wet or moist hands.
- The manufacturer will not be held responsible for any damage or loss of warranty privileges for other connected devices if the connection isn't compliant with their manuals.
- Don't use in damp or wet locations, near a bathtub, sink, shower, swimming pool, or anywhere else where water or moisture are present.
- This product isn't a toy. Keep away from children and animals!

2 PRODUCT DESCRIPTION

Walli Outlet-Control is a smart electrical outlet designed to control electrical devices in the Z-Wave® network.
It measures active power and energy consumed by the controlled load.
You can install it with a provided cover plate and socket cover or other compatible.

2.1 - Main features

- Can turn ON/OFF plugged device remotely
- Can be used with Walli covers or other compatible covers such as G55, LC, SO
- Supports Z-Wave® network Security Modes: S0 with AES-128 encryption and S2 Authenticated with PRNG-based encryption
- Works as a Z-Wave® signal repeater (all non-battery operated devices within the network act as repeaters to increase reliability of the network)

2.2. - Fully compatible Z-Wave Plus® device

This device can be used with all devices certified with the Z-Wave Plus® certificate and should be compatible with such devices produced by other manufacturers. All non-battery operated devices within the network will act as repeaters to increase reliability of the network. The device is a Security Enabled Z-Wave Plus® product and a Security Enabled Z-Wave Controller needs to be used to fully utilize the product.

2.3 - Technical specifications

Walli Outlet-Control is produced by Nice S.p.A. (TV).

Note
All technical specifications stated in this section refer to an ambient temperature of 20 °C (± 5 °C).
Nice S.p.A. reserves the right to apply modifications to the product at any time when deemed necessary, while maintaining the same functionalities and intended use.

Table 1 - Walli Outlet-Control type F - Hardware parameters	
Parameter	**Values / types**
Power supply	110 - 230 V~ 50/60 Hz
Rated load current	16 A – resistive loads
Active element	micro-gap relay μ
Required limit switches	Electronic or mechanic
Recommended external overcurrent protection	16A type B circuit breaker
For installation in boxes	Ø ≥ 60 mm, depth ≥ 40 mm
Recommended wires	cross-section area between 1.5 - 2.5 mm^2, stripped 15.5 - 16.5 mm of insulation
Radio frequency band	868.0–868.6MHz 869.7–870.0MHz
Max. transmitting power	+6dBm
Range	• up to 50 m outdoors • up to 40 m indoors Depending on the terrain and building structure
Radio protocol	Z-Wave (500 series chip)
Ambient humidity	10 – 90% RH without condensation
Operational temperature	0 - 40°C
Dimensions (Height × Width × Depth)	86 x 86 x 51 mm
Compliance with EU directives	RoHS 2011/65/EU RED 2014/53/EU

Note
Radio frequency of individual device must be same as your Z-Wave hub. Check information on the box or consult your dealer if you aren't sure.

3 INSTALLATION

3.1 - Safety rules

- ⚠ **Connecting the device in a manner inconsistent with this manual may cause risk to health, life or material damage.**
- Don't power the device before fully assembling it in the mounting box.
- Connect only in accordance with one of the figures.
- Install only in flush mounting boxes compliant with a relevant national safety standards and with depth no less than 50 mm.
- Don't connect devices which aren't compliant with the specification or relevant safety standards.

3.2 - Preparing for installation

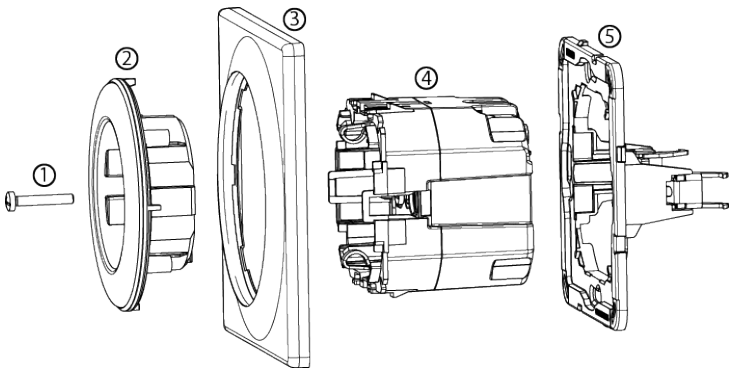

Figure 1: Device parts

Notes for Figure 1
1 – screw
2 - socket cover
3 – cover plate
4 – unit (device)
5 – mounting frame

1. Remove the screw.
2. Take off the socket cover and cover plate.
3. Prepare wires by removing 15.5-16.5 mm of insulation from their ends. Groove on the back of the unit shows maximum wire length.

3.3 - Electrical connection

1. Switch off the mains voltage (disable the fuse).
2. Connect with one of the figures below:

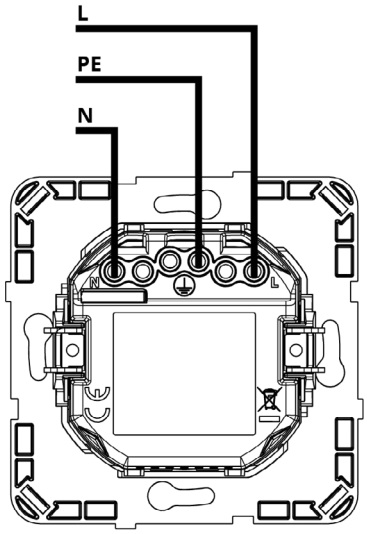

Notes for Figure 2

N – terminal for the neutral wire

⏚ – terminal for the earthing wire

L – terminal for the live wire

Figure 2: Example connection in electrical installation

3. Verify correctness of connection.
4. Tighten the terminal screws using PH1 screwdriver.

3.4 - Installation with Nice cover

1. Insert the device with mounting frame into the mounting box and secure with mounting claws and screws.
2. Snap the cover plate to the device.
3. Snap the socket cover to the device.
4. Secure with a screw.
5. Add the device to Z-Wave network. For more information, see 4 Adding to Z-Wave network.

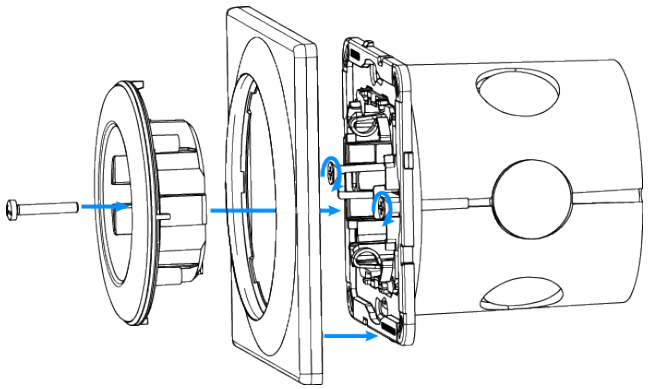

Figure 3: Installation with Nice cover

3.5 - Changing covers

- For safety reasons the button should be used only with Nice cover. We recommend adding the device to the Z-Wave network before changing the cover plate.
- The light effect might look different for covers other than Walli. You can adjust colour and/or intensity of the LEDs to suit the particular cover (using parameters 11, 12, and 13) or disable it by changing parameter 13 to 0.

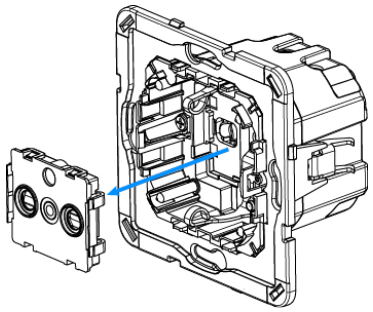

Figure 4: Dismounting shutter mechanism

3.5.1 - Installation with G55 cover

1. Switch off the mains voltage (disable the fuse).
2. Dismount the socket cover and cover plate.
3. Take the device out of the mounting box and detach the wires.
4. Dismount shutter mechanism using pliers.
5. Replace NICE mounting frame with G55 mounting frame (FG-Wx-AS-4001).
6. Connect wires according to Figure 2.
7. Insert the device with mounting frame into the mounting box and secure with mounting claws and screws.
8. Snap the new cover plate to the device.
9. Snap the new socket cover to the device.
10. Secure with a screw.
11. Switch on the mains voltage.

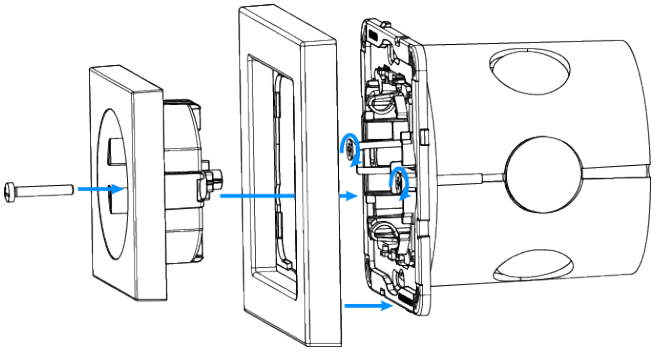

Figure 5: Installation with G55 cover

3.5.2 - Installation with LC cover

1. Switch off the mains voltage (disable the fuse).
2. Dismount the socket cover and cover plate.
3. Take the device out of the mounting box and detach the wires.
4. Replace NICE mounting frame with LC mounting frame (FG-Wx-AS-4002).
5. Connect wires according to Figure 2.
6. Insert the device with mounting frame into the mounting box and secure with mounting claws and screws.
7. Snap the new cover plate to the device.
8. Snap the new socket cover to the device.
9. Switch on the mains voltage.

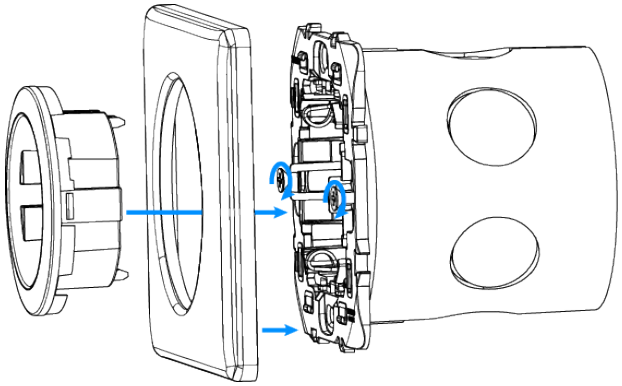

Figure 6: Installation with LC cover

3.5.3 - Installation with SO cover

1. Switch off the mains voltage (disable the fuse).
2. Dismount the socket cover and cover plate.
3. Take the device out of the mounting box and detach the wires.
4. Replace NICE mounting frame with SO mounting frame (FG-Wx-AS-4003).
5. Connect wires according to Figure 2.
6. Insert the device with mounting frame into the mounting box and secure with mounting claws and screws.
7. Snap the new cover plate to the device.
8. Snap the new socket cover to the device.
9. Switch on the mains voltage.

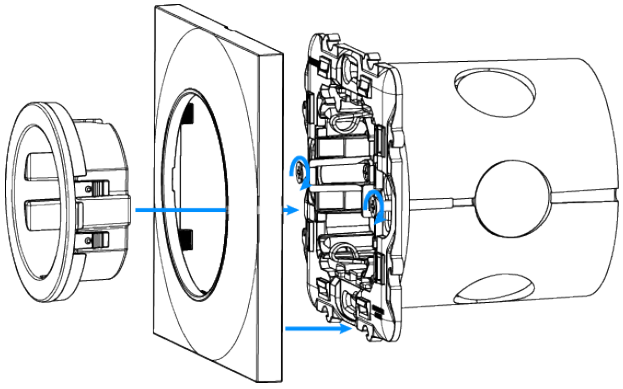

Figure 7: Installation with SO cover

4 ADDING TO Z-WAVE NETWORK

Adding (Inclusion) – Z-Wave device learning mode, which enables adding the device to the existing Z-Wave network.

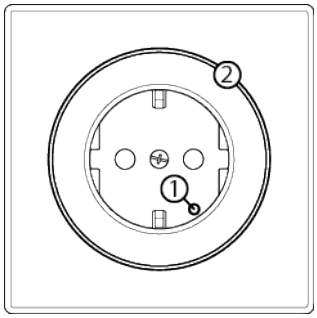

Notes for Figure 8

1 – button

2 – LED ring

Figure 8: Location of button and LED ring

4.1 - Adding manually

Note

- The full device security key (DSK) code is present only on the box, make sure to keep it or copy the code.
- Use the button only with Nice cover to ensure safety.

1. Power the device.
2. Set the main hub in the (Security/non-Security Mode) add mode. For more information, see the hub manual.
3. Quickly, three times click the button.
4. If you are adding in Security S2 Authenticated, input the underlined part of DSK, which is labelled on the bottom of the box.
5. LED starts blinking yellow, wait for the adding process to end.
6. Adding result is confirmed with the Z-Wave hub message and the LED frame:
   - **Green** – successful (non-secure, S0, S2 non-authenticated)
   - **Magenta** – successful (Security S2 Authenticated)
   - **Red** – not successful

4.2 - Adding using SmartStart

With the **SmartStart** function enabled products can be added into the Z-Wave network by scanning the Z-Wave QR Code present on the product with a hub providing the SmartStart inclusion. A SmartStart product is added automatically within 10 minutes of being switched on in the network range.

Note
To use the SmartStart function your hub needs to support Security S2. For more information, see the hub manual.

1. Enter the full DSK string code to your hub. If your hub is capable of QR scanning, scan the QR code placed on the label on the bottom of the box.
2. Power the device.
3. Wait for the adding process to start (up to a few minutes), which is signalled with yellow LED blinking.
4. Adding result is confirmed with the Z-Wave hub message and the LED frame:
   - **Green** – successful (non-secure, S0, S2 non-authenticated)
   - **Magenta** – successful (Security S2 Authenticated)
   - **Red** – not successful

Note
In case of problems with adding the device, reset the device and repeat the adding procedure.

5 REMOVING FROM Z-WAVE NETWORK

Removing (Exclusion) – Z-Wave device learning mode, which enables removing the device from the existing Z-Wave network. Removing also results in resetting the device to factory defaults.

1. Power the device.
2. Set the main hub in the remove mode. For more information, see the hub manual.
3. Quickly, three times click the button. For more information, see Figure 8.
4. LED starts blinking yellow, wait for the removing process to end.
5. Successful removing is confirmed with the Z-Wave hub message and red LED colour.

6 OPERATING DEVICE

6.1 - Button control

Note
Use the button only with NICE cover to ensure safety. For information on the button location see Figure 8.

Other actions

- 1 x click – change to the opposite state (ON/OFF)
- 3 x click – start the learn mode to add/remove to/from the Z-Wave network
- Press and hold – enter the menu

6.2 - Visual indications

The built-in LED light shows current device status.

Table 2 - Walli Outlet-Control type F - Responses to button actions

Action	Colour	Meaning
After powering the device	Green	Device added to a Z-Wave network (non-secure, S0, S2 non-authenticated)
	Magenta	Device added to a Z-Wave network (Security S2 Authenticated)
	Red	Device not added to a Z-Wave network
State of the device	White	Load turned ON (by default)
Update	Blinking cyan	Update in progress
	Green	Update successful
	Red	Update not successful
Menu	Blinking green	Entering the menu (added as non-secure, S0, S2 non-authenticated)
	Blinking magenta	Entering the menu (added as Security S2 Authenticated)
	Blinking red	Entering the menu (not added to a Z-Wave network)
	Green	Resetting energy consumption memory
	Magenta	Starting the Z-Wave range test
	Yellow	Resetting to the factory defaults

6.3 - Menu

Menu enables performing the Z-Wave network actions.

To use the menu:

1. Press and hold the button to enter the menu, device blinks to signal adding status For more information, see 6.2 - Visual indications.
2. Release the button when the device signals a desired position with colour:
   - **Green** – reset energy consumption memory
   - **Magenta** - start the Z-Wave range test
   - **Yellow** – reset to factory defaults
3. Quickly click the button to confirm.

7 RESETTING TO FACTORY DEFAULTS

Reset procedure restoring the device back to its factory settings, which means all information about the Z-Wave hub and user configuration are deleted. Resetting to factory defaults doesn't reset energy consumption memory.

Note

- Resetting the device isn't the recommended way of removing the device from the Z-Wave network. Use reset procedure only if the primary hub is missing or inoperable. Certain device removal can be achieved by the procedure of removing described.
- Use the button only with NICE cover to ensure safety.

1. Press and hold the button to enter the menu.
2. Release the button when the device glows yellow.
3. Quickly click the button to confirm.
4. Device blinks yellow to confirm.
5. After a few seconds the device is restarted, which is signalled with red LED colour.

8 POWER AND ENERGY METERING

The device enables the active power and energy consumption monitoring. Data is sent to the main Z-Wave hub. Measuring is carried out by the most advanced microcontroller technology, assuring maximum accuracy and precision (+/- 1% for loads greater than 10 W).

Electric active power – power that energy receiver is changing into a work or a heat. The unit of active power is Watt [W].

Note
Power measurement can contain mains voltage fluctuations within +/- 10%.

> **Electric energy** – energy consumed by a device through a time period. Consumers of electricity in households are billed by suppliers on the basis of active power used in given unit of time. Most commonly measured in kilowatt-hour [kWh]. One kilowatt-hour is equal to one kilowatt of power consumed over period of one hour, 1 kWh = 1000 Wh.

To reset consumption memory:

Note
Use the button only with NICE cover to ensure safety

1. Press and hold the button to enter the menu.
2. Release button when the device glows green.
3. Quickly click the button. Device blinks two times green to confirm.

Note
The device stores periodically the consumption data in the device memory. Disconnecting the module from the power supply doesn't erase stored energy consumption data.

9 Z-WAVE RANGE TEST

The device has a built in Z-Wave network main hub range tester.

Note
To perform Z-Wave range test, the device needs to be added to the Z-Wave hub. Testing may stress the network, so it's recommended to perform the test only if needed.

To test the main hub range:

1. Press and hold the button to enter the menu.
2. Release button when the device glows magenta.
3. Quickly click the button to confirm.
4. Visual indicator indicates the Z-Wave network range. Range signalling modes are described in the table below.
5. To exit Z-Wave range test, press the button briefly.

Table 3 - Walli Outlet-Control type F - Z-Wave range tester signalling modes

Visual indicator signal	Description
Pulsing green	The device attempts to establish a direct communication with the main hub. If a direct communication attempt fails, the device tries to establish a routed communication, through other modules, which are signalled by visual indicator pulsing yellow.
Glowing green	The device communicates with the main hub directly.
Pulsing yellow	The device tries to establish a routed communication with the main hub through other modules (repeaters).
Glowing yellow	The device communicates with the main hub through the other modules. After two seconds the device retries to establish a direct communication with the main hub, which is signalled with visual indicator pulsing green.
Pulsing violet	The device communicates at the maximum distance of the Z-Wave network. If connection proves successful it's confirmed with a yellow glow. It's not recommended to use the device at the range limit.
Glowing red	The device isn't able to connect to the main hub directly or through another Z-Wave network device (repeater).

Note
Communication mode of the device may switch between direct and one using routing, especially if the device is on the limit of the direct range.

10 ASSOCIATIONS

Association (linking devices) – direct control of other devices within the Z-Wave system network.

Associations enable:

- reporting the device status to the Z-Wave hub with Lifeline group.
- creating simple automations by controlling other devices without participation of the main hub using groups assigned to actions on the device.

The device provides the association of 2 groups listed in the table below.

Table 4 - Walli Outlet-Control type F - Association groups

Association group	Name	Description
1st	Lifeline	Reports the device status and enables assigning a single device, the hub by default. Only one node can be assigned.
2nd	Power	Devices in this group are switched on or off depending on the current load of the plugged device (uses Basic command class). Power thresholds and behaviour are configured using parameters 45 - 49. Enables controlling five regular or multichannel devices.

11 ADVANCED PARAMETERS

The device operation can be customized according to the user needs. The settings can be adjusted using Z-Wave hub to which the device is added. The way of adjusting them might differ depending on the hub.

In the Yubii Home interface parameters are presented as simple options in Parameters tab/settings of the device.

Table 5 - Walli Outlet-Control type F - Advanced parameters

Parameter	Description	Available setting	Default setting	Parameter size
1. Remember device state	Determines how the device reacts in case of power supply failure such as power outage	**0** – remains switched off after restoring power **1** – restores remembered state after restoring power	**1** (restores the state)	**1** [byte]
2. Overload safety switch	Enables turning off the controlled device in case of exceeding the defined power. Controlled device can be turned back on using the button or sending a control frame.	**0** – function disabled **10 - 36800** (1.0-3680.0 W, step 0.1 W) – power threshold	**0** (disabled)	**4** [bytes]
10. LED frame – power limit	Determines maximum active power. Exceeding it results in the LED frame flashing violet. Function is active only when parameter 11 is set to 8 or 9.	**500 - 36800** (50.0 - 3680.0W, step 0.1 W) – power threshold	**36800** (3680 W)	**4** [bytes]
11. LED frame – colour when ON	Defines the LED colour when the device is ON. When set to 8 or 9, LED frame colour changes depending on the measured power and parameter 10. Other colours are set permanently and don't depend on power consumption.	**0** – LED disabled **1** – white **2** – red **3** – green **4** – blue **5** – yellow **6**- cyan **7** - magenta **8** - colour changes smoothly depending on measured power **9** – colour changes in steps depending on measured power	**8** (depending on measured power)	**1** [byte]
12. LED frame – colour when OFF	Defines the LED colour when the device is OFF	**0** – LED disabled **1** – white **2** – red **3** – green **4** – blue **5** – yellow **6**- cyan **7** - magenta	**0** (disabled)	**1** [byte]
13. LED frame – brightness	Enables adjusting the LED frame brightness	**0** – LED disabled **1 - 100** (1 - 100% brightness) **101** – brightness directly proportional to measured power **102** – brightness inversely proportional to measured power	**100** (100%)	**1** [byte]
30. Alarm configuration - 1st slot	Determines to which alarm frames and how the device should react. The parameters consist of 4 bytes, three most significant bytes are set according to the official the Z-Wave protocol specification.	• **1B [MSB]** – Notification Type • **2B** – Notification Status • **3B** – Event/State Parameters • **4B [LSB]** – action: **0x00 –** no action on output **0xX1 –** turn ON **0xX2 –** turn OFF **0xX3 –** turn ON/OFF continuously **0x0X –** no action on LED frame **0x1X –** LED frame blinks red **0x2X –** LED frame blinks green **0x4X –** LED frame blinks blue **0x8X –** disable LED frame **0xFX –** LED activate alarm sequence (redwhite-blue)	**[0x00, 0x00, 0x00, 0x00]** (disabled)	**4** [bytes]
31. Alarm configuration - 2nd slot			**[0x05, 0xFF, 0x00, 0x00]** (Water Alarm, any notification, no action)	
32. Alarm configuration - 3rd slot			**[0x01, 0xFF, 0x00, 0x00]** (Smoke Alarm, any notification, no action)	
33. Alarm configuration - 4th slot			**[0x02, 0xFF, 0x00, 0x00]** (CO Alarm, any notification, no action)	
34. Alarm configuration - 5th slot			**[0x04, 0xFF, 0x00, 0x00]** (Heat Alarm, any notification, no action)	

Table 5 - Walli Outlet-Control type F - Advanced parameters				
Parameter	**Description**	**Available setting**	**Default setting**	**Parameter size**
35. Alarm configuration – duration	Defines duration of alarm sequence. When time set using this parameter elapses, an alarm is cancelled, LED frame and relay restore normal operation, but don't recover state from before the alarm.	**0** – infinite **1 - 32400** (1 s - 9 h, 1 s step) – duration	**600** (10min)	**1** [byte]
45. Associations – 2nd group	Determines which actions result in sending control frames to devices associated in the 2nd group.	**1** – Power exceeds UP threshold **2** – Power drops below DOWN threshold **3** – Power exceeds UP threshold or drops below DOWN threshold	**3**	**1** [byte]
46. Associations – UP threshold	Determines upper power threshold for the 2nd association group (parameter 45). Exceeding it results in sending value set in parameter 47. Cannot be lower than DOWN threshold (parameter 48).	**100 - 36800** (10 - 3680 W, 0.1 W step) – power threshold	**500** (50 W)	**4** [bytes]
47. Associations – UP threshold frame value	Defines value sent to devices in the 2nd association group when power exceeds UP threshold set in parameter 46 (using Basic Command Class).	**0** – turn off **1 - 99** – set level **255** – turn on with previous level	**255**	**2** [bytes]
48. Associations – DOWN threshold	Determines lower power threshold for the 2nd association group (parameter 45). Exceeding it results in sending value set in parameter 49.	**0 - 36700** (0 - 3670 W, 0.1 W step) – power threshold	**300** (30 W)	**4** [bytes]
49. Associations – DOWN threshold frame value	Defines value sent to devices in the 2nd association group when power exceeds DOWN threshold set in parameter 48 (using Basic Command Class).	**0** – turn off **1 - 99** – set level **255** – turn on with previous level	**0**	**2** [bytes]
60. Power reports – include self-consumption	Determines whether the power measurements should include power consumed-by the device itself	**0** – Self-consumption not included **1** – Self-consumption included	**0** (not included)	**1** [byte]
61. Power reports – on change	Defines minimal change (from the last reported) in measured power that results in sending new report. For loads under 50 W the parameter is irrelevant, report is sent every 5 W change.	**0** – reporting on change disabled **1 - 500** (1 - 500%, 1% step) – minimal change	**15** (15%)	**2** [bytes]
62. Power reports – periodic	Defines reporting interval for measured power. Periodic reports are independent from changes in value (parameter 61).	**0** – periodic reports disabled **30 - 32400** (30 s - 9 h, 1 s step) – time interval	**3600** (1 h)	**2** [bytes]
65. Energy reports – on change	Defines minimal change (from the last reported) in measured energy that results in sending a new report.	**0** – reporting on change disabled **1 - 500** (0.01 - 5 kWh, 0.01 kWh step) – minimal change	**10** (0.1 kWh)	**2** [bytes]
66. Energy reports – periodic	Defines reporting interval for measured energy. Periodic reports are independent from changes in value (parameter 65).	**0** – periodic reports disabled **30 - 32400** (30 s - 9 h, 1 s step) – time interval	**3600** (1 h)	**2** [bytes]

12 Z-WAVE SPECIFICATION

Generic Device Class: GENERIC_TYPE_SWITCH_BINARY
Specific Device Class: SPECIFIC_TYPE_POWER_SWITCH_BINARY

Table 6 - Walli Outlet-Control type F - Supported Command Classes

No.	Command Class	Version	Secure
1.	COMMAND_CLASS_ZWAVEPLUS_INFO [0x5E]	V2	
2.	COMMAND_CLASS_SWITCH_BINARY [0x25]	V1	YES
3.	COMMAND_CLASS_ASSOCIATION [0x85]	V2	YES
4.	COMMAND_CLASS_MULTI_CHANNEL_ASSOCIATION [0x8E]	V3	YES
5.	COMMAND_CLASS_ASSOCIATION_GRP_INFO [0x59]	V2	YES
6.	COMMAND_CLASS_TRANSPORT_SERVICE [0x55]	V2	
7.	COMMAND_CLASS_VERSION [0x86]	V2	YES
8.	COMMAND_CLASS_MANUFACTURER_SPECIFIC [0x72]	V2	YES
9.	COMMAND_CLASS_DEVICE_RESET_LOCALLY [0x5A]	V1	YES
10.	COMMAND_CLASS_POWERLEVEL [0x73]	V1	YES
11.	COMMAND_CLASS_SECURITY [0x98]	V1	
12.	COMMAND_CLASS_SECURITY_2 [0x9F]	V1	
13.	COMMAND_CLASS_METER [0x32]	V3	YES
14.	COMMAND_CLASS_CONFIGURATION [0x70]	V1	YES
15.	COMMAND_CLASS_CRC_16_ENCAP [0x56]	V1	
16.	COMMAND_CLASS_NOTIFICATION [0x71]	V8	YES
17.	COMMAND_CLASS_PROTECTION [0x75]	V2	YES
18.	COMMAND_CLASS_FIRMWARE_UPDATE_MD [0x7A]	V4	YES
19.	COMMAND_CLASS_APPLICATION_STATUS [0x22]	V1	
20.	COMMAND_CLASS_SUPERVISION [0x6C]	V1	
21.	COMMAND_CLASS_BASIC [0x20]	V1	YES

The device uses Notification Command Class to report different events to the hub (“Lifeline” group).

Table 7 - Walli Outlet-Control type F - Notification Command Class

Notification Type	Event	Parameter
Power Management [0x08]	Overcurrent detected [0x06/V3]	
Power Management [0x08]	Overload detected [0x08/V3]	
System [0x09]	System hardware failure with manufacturer proprietary failure code [0x03]	MP code: 0x01 [device overheat]

Protection Command Class enables preventing local or remote control of the outputs.

Table 8 - Walli Outlet-Control type F - Protection Command Class

Type	State	Description	Hint
Local	0	Unprotected - The device isn't protected, and may be operated normally with the user interface.	Inputs connected with outputs.
Local	2	No operation possible – button cannot change relay state, any other functionality is available (menu).	Inputs disconnected from outputs.
RF	0	Unprotected - The device accept and respond to all RF Commands.	Outputs can be controlled with Z-Wave.
RF	1	No RF control – command class basic and switch binary are rejected, every other command class is handled.	Outputs can't be controlled with Z-Wave.

Table 9 - Walli Outlet-Control type F - Meter Command Class				
Meter Type	**Scale**	**Rate Type**	**Precision**	**Size**
Electric [0x01]	Electric_kWh [0x00] (default)	Import [0x01]	2	4
Electric [0x01]	Electric_W [0x02]	Import [0x01]	1	2

13 PARTS COMPATIBILITY

Table 10 - Walli Outlet-Control type F - Available Nice parts			
Name	**Symbol**	**Included in**	
Socket F Unit	FG-WO-AS-4002	FGWOF-011, FGWOF-011-8	
Outer Lightguide	FG-WO-PP-0004	FGWOF-011, FGWOF-011-8	FGWOE-011, FGWOF-011-8
Shutter Unit	FG-WO-AS-4001	FGWOF-011, FGWOF-011-8	FGWOE-011, FGWOF-011-8
Mounting Frame NICE	FG-Wx-AS-4004	FGWOF-011, FGWOF-011-8	FGWOE-011, FGWOF-011-8
Mounting Frame G55	FG-Wx-AS-4001		
Mounting Frame LC	FG-Wx-AS-4002		
Mounting Frame SO	FG-Wx-AS-4003		
Socket F (white)	FG-WO-PP-0010	FGWOF-011	
Single Cover Plate (white)	FG-Wx-PP-0001	FGWOF-011	FGWOE-011
Double Cover Plate (white)	FG-Wx-PP-0003		
Triple Cover Plate (white)	FG-Wx-PP-0004		

Table 11 - Walli Outlet-Control type F - Required Nice parts for G55 (only with non-metalised outer surface: Standard 55, E2, Event, Event Clear) covers		
Required NICE parts		**Socket type**
Name	**Symbol**	**G55 type F**
Socket F Unit	FG-WO-AS-4002	x
Mounting Frame G55	FG-Wx-AS-4001	x

Table 12 - Walli Outlet-Control type F - Required Nice parts for LC selected covers		
Required NICE parts		**Socket type**
Name	**Symbol**	**LC type F**
Socket F Unit	FG-WO-AS-4002	x
Mounting Frame LC	FG-Wx-AS-4002	x
Shutter Unit	FG-WO-AS-4001	x

Table 13 - Walli Outlet-Control type F- Required Nice parts for SO selected covers		
Required NICE parts		**Socket type**
Name	**Symbol**	**SO type F**
Socket F Unit	FG-WO-AS-4002	x
Mounting Frame SO	FG-Wx-AS-4003	x
Shutter Unit	FG-WO-AS-4001	x

14 PRODUCT DISPOSAL

This product is an integral part of the automation and therefore must be disposed together with the latter. At the end of the product lifetime, the disassembly and scrapping operations must be performed by qualified personnel.
This product is made of various types of material, some of which can be recycled while others must be scrapped. Seek information on the recycling and disposal systems envisaged by the local regulations in your area for this product category.



As indicated by the symbol alongside, disposal of this product in domestic waste is strictly prohibited. Separate the waste into categories for disposal, according to the methods envisaged by current legislation in your area, or return the product to the retailer when purchasing a new version.

⚠ CAUTION!

- Some parts of the product may contain pollutant or hazardous substances which, if disposed of into the environment, may cause serious damage to the environment or physical health.
- Local legislation may envisage serious fines in the event of abusive disposal of this product.

15 DECLARATION OF CONFORMITY

Hereby, Nice S.p.A., declares that the radio equipment type Walli Outlet-Control type F is in compliance with Directive 2014/53/EU. The full text of the EU Declaration of Conformity is available at: http://www.niceforyou.com/en/support.

IS0983A00EN_07-07-2026

Nice SpA
Oderzo TV Italia
info@niceforyou.com