Walli

On/Off-Control Unit

Compatible with Yubii® ECOSYSTEM

Turning electrical devices on/off remotely

EN - Instructions and warnings for installation and use

v2.5

Nice

1 WARNINGS AND GENERAL PRECAUTIONS

- **This manual contains important instructions and warnings for personal safety.** Carefully read all parts of this manual. If in doubt, suspend installation immediately and contact Nice Technical Assistance.
- **Using this product for different purposes than specified in this manual is strictly forbidden!**
- **All installation and connection operations must be performed exclusively by suitably qualified and skilled personnel with the unit disconnected from the mains power supply.**
- The product packaging materials must be disposed of in full compliance with local regulations.
- Never apply modifications to any part of the device. Operations other than those specified can cause malfunctions. The manufacturer declines all liability for damage caused by makeshift modifications to the product.
- Never place the device near the sources of heat or expose to naked flames. These actions can damage the product and cause malfunctions.
- The device is designed to operate in an electrical home installation. Faulty connection or use can result in a fire or electric shock.
- Even when the device is turned off, voltage can be present at its terminals. Any maintenance introducing changes to the configuration of connections or the load must be always performed with a disabled fuse.
- To avoid risk of electrical shock, don't operate the device with wet or moist hands.
- The manufacturer will not be held responsible for any damage or loss of warranty privileges for other connected devices if the connection isn't compliant with their manuals.
- Don't use in damp or wet locations, near a bathtub, sink, shower, swimming pool, or anywhere else where water or moisture are present.
- This product isn't a toy. Keep away from children and animals!

2 PRODUCT DESCRIPTION

Walli On/Off-Control Unit is a smart wall switch designed to control light source with the Z-Wave® network.
It measures active power and energy consumed by the controlled load.
You can install it with a provided cover plate and switch button or other compatible.

2.1 - Main features

- Can be used with:
  - » Conventional incandescent and halogen light sources
  - » LED lamps
  - » Fluorescent lamps
  - » Electronic transformers (for ELV halogen lamps and LED bulbs)
  - » Ferromagnetic transformers (for MLV halogen lamps)
- Can be used with Walli covers or other compatible covers such as G55, LC, SO
- Supports Z-Wave® network Security Modes: S0 with AES-128 encryption and S2 Authenticated with PRNG-based encryption.
- Works as a Z-Wave® signal repeater (all non-battery operated devices within the network act as repeaters to increase reliability of the network).

2.2. - Fully compatible Z-Wave Plus® device

This device can be used with all devices certified with the Z-Wave Plus® certificate and should be compatible with such devices produced by other manufacturers. All non-battery operated devices within the network will act as repeaters to increase reliability of the network. The device is a Security Enabled Z-Wave Plus® product and a Security Enabled Z-Wave Controller needs to be used to fully utilize the product.

2.3 - Technical specifications

Walli On/Off-Control Unit is produced by Nice S.p.A. (TV).

Note

All technical specifications stated in this section refer to an ambient temperature of 20 °C (± 5 °C).
Nice S.p.A. reserves the right to apply modifications to the product at any time when deemed necessary, while maintaining the same functionalities and intended use.

Table 1 - Walli On/Off-Control Unit - Hardware parameters

Parameter	Values / types
Power supply	110 - 230 V~ 50/60 Hz
Rated load current	13A per one channel 16A total
Compatible load types	• Incandescent bulbs • Fluorescent lamps • Electronic transformers • Ferromagnetic transformers • LED
Active element	micro-gap relay μ
Recommended external overcurrent protection	10 A type B circuit breaker (EU) 13 A type B circuit breaker (Sweden)
For installation in boxes	Ø ≥ 60 mm, depth ≥ 40 mm
Recommended wires	cross-section area between 1.5 - 4.0 mm^2, stripped 11.5 - 13 mm of insulation
Radio frequency band	868.0–868.6MHz 869.7–870.0MHz
Max. transmitting power	+6dBm
Range	• up to 50 m outdoors • up to 40 m indoors Depending on the terrain and building structure
Radio protocol	Z-Wave (500 series chip)
Ambient humidity	10 – 95% RH without condensation
Operational temperature	0 - 35°C
Dimensions (Height × Width × Depth)	86 x 86 x 51 mm
Compliance with EU directives	RoHS 2011/65/EU RED 2014/53/EU

Note

Radio frequency of individual device must be same as your Z-Wave hub. Check information on the box or consult your dealer if you aren't sure.

3 INSTALLATION

3.1 - Safety rules

- ⚠ **Connecting the device in a manner inconsistent with this manual may cause risk to health, life or material damage.**
- Don't power the device before fully assembling it in the mounting box.
- Connect only in accordance with one of the figures.
- Install only in flush mounting boxes compliant with a relevant national safety standards and with depth no less than 40 mm.
- Don't connect devices which aren't compliant with the specification or relevant safety standards.
- Don't connect heating devices.
- Don't connect SELV or PELV circuits.

3.2 - Preparing for installation

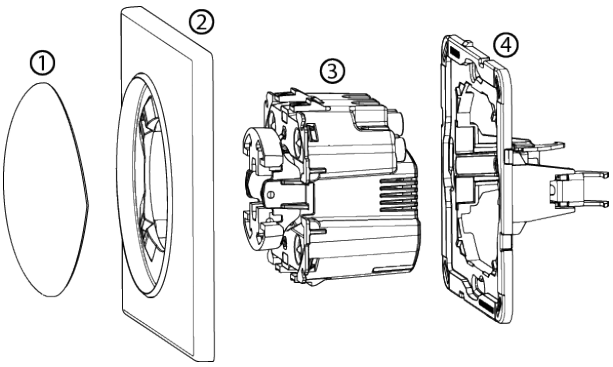

Figure 1: Device parts

Notes for Figure 1
1 – switch button
2 – cover plate
3 – unit (device)
4 – mounting frame

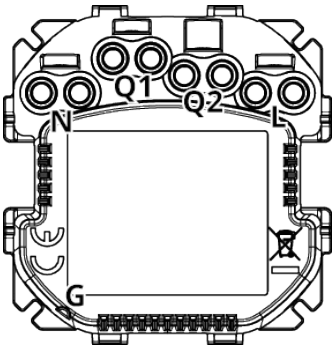

Figure 2: Device terminals

Notes for Figure 2
N – terminal for neutral wire
Q1 – output terminal of the 1st channel
Q2 – output terminal of the 2nd channel
L – terminal for live wire
G – groove used to measure wire length

Prepare wires by removing 11.5 -13 mm of insulation from their ends. You can use groove on the side of the unit to measure the length.

When installing with NICE or G55 cover plates:

1. Pull out the switch button.
2. Take off the cover plate.

When installing with LC or SO cover plates:

1. Pull out the original switch button.
2. Take off the original cover plate.
3. Dismount the original mounting frame.
4. Snap the new mounting frame.

Note
Additional mounting frames are sold separately. Make sure you have all required parts when installing with covers other than Nice.

3.3 - Electrical connection

1. Switch off the mains voltage (disable the fuse).
2. Connect with one of the figures below:

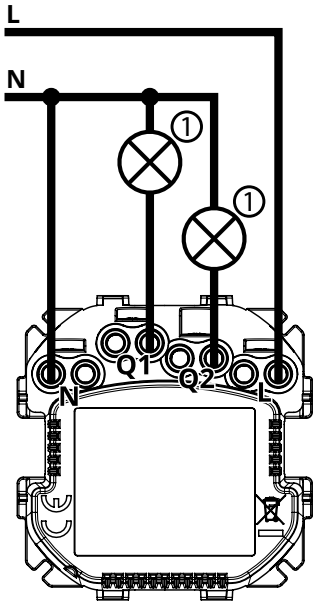

Figure 3: Example connection for double switch configuration

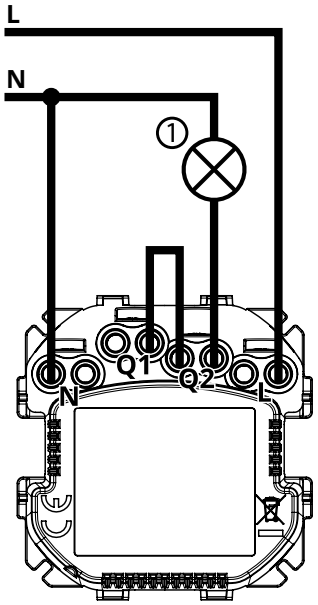

Figure 4: Example connection for single switch configuration

Notes for Figure 3 - 6

1 – load

2 – 2-way switch

3 – intermediate/crossover switch

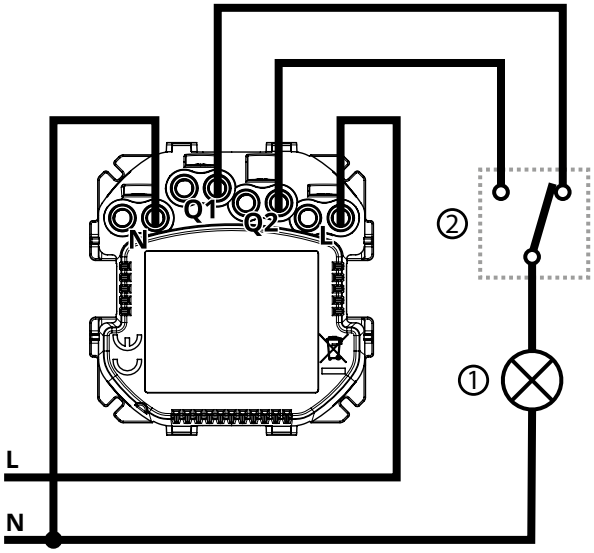

Figure 5: Example connection for 2-way switching

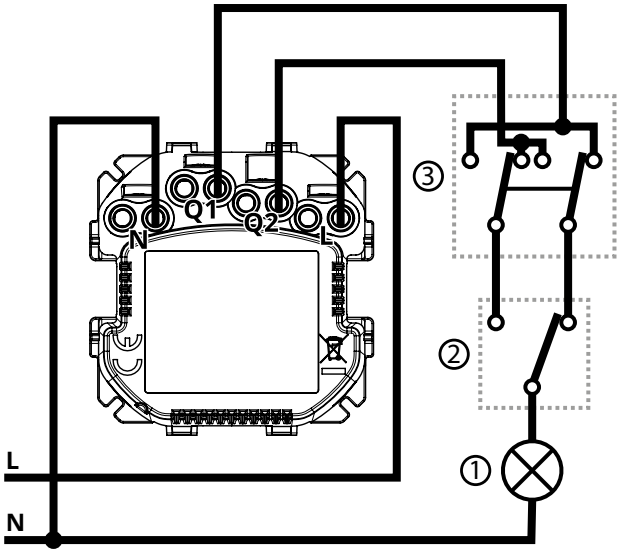

Figure 6: Example connection for 3-way switching

3. Verify correctness of connection.
4. Tighten the terminal screws using PH1 screwdriver.

3.4 - Assembling device

- When installing the device in the mounting box orient the device with terminal screws going up or to the left (for horizontal button position) to ensure button order.
- The light effect might look different for covers other than Walli. You can adjust colour and/or intensity of the LEDs to suit the particular cover with parameters 11, 12, and 13 or disable it by setting parameter 13 to 0.

3.4.1 - Installation with Nice cover

1. Insert the device with mounting frame into the mounting box and secure with mounting claws and screws.
2. Snap the cover plate to the device.
3. Snap the switch button to the device.

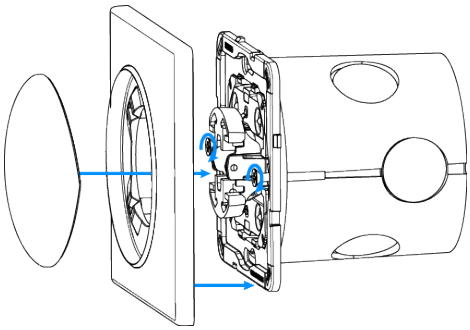

Figure 7: Installation with Nice cover

3.4.2 - Installation with G55 cover

1. Insert the device with mounting frame into the mounting box and secure with mounting claws and screws.
2. Snap the new cover plate to the device.
3. Snap the switch button adapter (sold separately) to the device.
4. Snap the new switch button to the device.

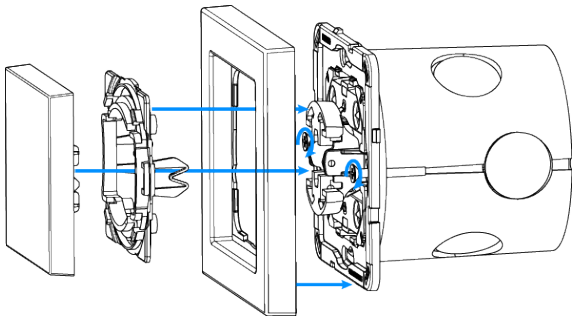

Figure 8: Installation with G55 cover

3.4.3 - Installation with LC cover

1. Insert the device with mounting frame (sold separately) into the mounting box and secure with mounting claws and screws.
2. Snap the switch button adapter (sold separately) to the device.
3. Snap the new inner cover plate to the device.
4. Snap the new outer cover plate to the device.
5. Snap the new switch button to the device.

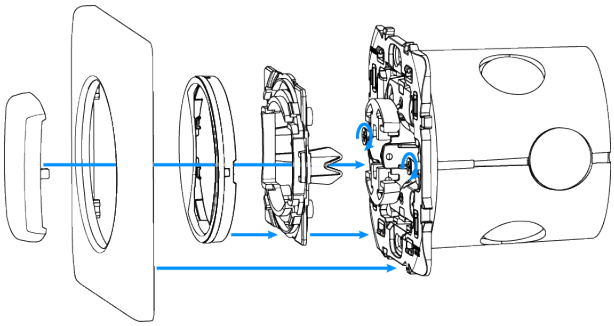

Figure 9: Installation with LC cover

3.4.4 - Installation with SO cover

1. Insert the device with mounting frame (sold separately) into the mounting box and secure with mounting claws and screws.
2. Snap the new cover plate to the device.
3. Snap the new switch button to the device.

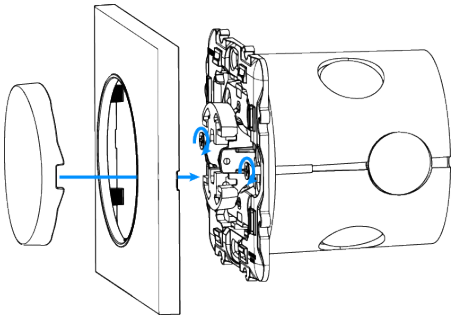

Figure 10: Installation with SO cover

3.5 - Activating device

1. If the device is fully assembled, switch on the mains voltage.
2. LED ring light notifies that the device is powered.
3. If you have installed the device as single switch or in 2-way or 3-way system, change the operating mode to Single Switch. For more information, see 6.1 - Single/Double Switch operating mode
4. Add the device to the Z-Wave network.
5. If you have installed the device in 2-way or 3-way system, change value of parameter 20 to 3.

4 ADDING TO Z-WAVE NETWORK

Adding (Inclusion) – Z-Wave device learning mode, which enables adding the device to the existing Z-Wave network.

Note
If you want to change single/double switch operating mode, you need to do it before adding the device to the Z-Wave network. For more information, see 6.1 - Single/Double Switch operating mode

4.1 - Adding manually

1. Power the device.
2. Set the main hub in the (Security/non-Security Mode) add mode. For more information, see the hub manual.
3. Quickly, three times click one of the buttons.
4. If you are adding in Security S2 Authenticated, input the underlined part of the device security key (DSK), which is labelled on the bottom of the box.
5. LED starts blinking yellow, wait for the adding process to end.
6. Adding result is confirmed with the Z-Wave hub message and the LED frame:
   - **Green** – successful (non-secure, S0, S2 non-authenticated)
   - **Magenta** – successful (Security S2 Authenticated)
   - **Red** – not successful

4.2 - Adding using SmartStart

With the **SmartStart** function enabled products can be added into the Z-Wave network by scanning the Z-Wave QR Code present on the product with a hub providing the SmartStart inclusion. A SmartStart product is added automatically within 10 minutes of being switched on in the network range.

Note
To use the SmartStart function your hub needs to support Security S2. For more information, see the hub manual.

1. Enter the full DSK string code to your hub. If your hub is capable of QR scanning, scan the QR code placed on the label on the bottom of the box.
2. Power the device.
3. Wait for the calibration process to end. Light may blink, the device is switched off once the process is completed.
4. Wait for the adding process to start (up to a few minutes), which is signalled with yellow LED blinking.
5. Adding result is confirmed with the Z-Wave hub message and the LED frame:
   - **Green** – successful (non-secure, S0, S2 non-authenticated)
   - **Magenta** – successful (Security S2 Authenticated)
   - **Red** – not successful

Note
In case of problems with adding the device, reset the device and repeat the adding procedure.

5 REMOVING FROM Z-WAVE NETWORK

Removing (Exclusion) – Z-Wave device learning mode, which enables removing the device from the existing Z-Wave network. Removing also results in resetting the device to factory defaults.

1. Power the device.
2. Set the main hub in the remove mode. For more information, see the hub manual.
3. Quickly, three times click one of the buttons.
4. LED starts blinking yellow, wait for the removing process to end.
5. Successful removing is confirmed with the Z-Wave hub message and red LED colour.

Note
Removing device isn't possible if the central scene notifications have been activated with parameters 40 and 41.

6 OPERATING DEVICE

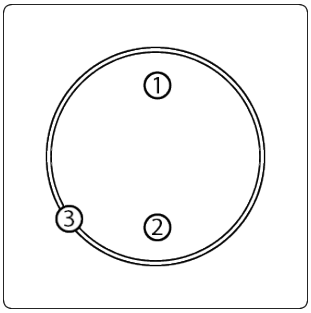

Figure 11: Controls

Notes for Figure 11

1 – the first button

2 – the second button

3 – LED ring

6.1 - Single/Double Switch operating mode

The device can work as single or double switch:

- **Double Switch mode** (default) – the device can control two separate loads, but they can be up to 13 A per channel and 16 A total.
- **Single Switch mode** – the device can control only one load, but it can be rated up to 16 A.

Note

Changing operating mode needs to be performed before adding it to the Z-Wave network!

To change operating mode:

1. Quickly, three times click, then press and hold one of the buttons to enter the menu.
2. Release button when the device glows white.
3. Quickly click the button to confirm.
4. The device changes and signal the new operating mode with:
   - one white blink – Single Switch mode.
   - two white blinks – Double Switch mode.

6.2 - Multiway switching

In 2-way/3-way configuration the device simulates 2-way switch operation, enabling you to connect additional 2-way and intermediate non-smart switches. Multiway switching is available only in Single Switch mode.

To enable 2-way/3-way configuration set parameter 20 to 3.

Operation of the device in this configuration:

- Relays states are always opposite to each other.
- Every click of the device buttons switches both relays.
- The device detects state of the load.
- The LED ring glows only if the load operation is detected.
- Associations, scenes, menu, learning mode and local protection work for device buttons only.

6.3 - Button control

Controlling connected loads

Button operation is configurable using parameters 20 and 24. Perform below-listed actions on one of the buttons to change state of the connected load.

Double Switch mode – the 1st button controls the 1st channel and the 2nd button controls the 2nd channel:

• Click to change to the opposite state, ON/OFF (by default).

Single Switch mode – both buttons control the load:

• Click to change to the opposite state, ON/OFF (by default).

Other actions

- 3 x click – start learn mode to add/remove to/from the Z-Wave network
- 1, 2, 3 x click/hold/release – activate scene in the hub for specific action (requires prior configuration using parameters 40 and 41)
- 3 x click, then press, and hold – enter the menu

6.4 - Visual indications

The built-in LED light shows current device status.

Table 2 - Walli On/Off-Control Unit - Responses to button actions		
Action	**Colour**	**Meaning**
After powering the device	Green	Device added to a Z-Wave network (non-secure, S0, S2 non-authenticated)
	Magenta	Device added to a Z-Wave network (Security S2 Authenticated)
	Red	Device not added to a Z-Wave network
State of the device	White	Load turned ON (configurable)
Update	Blinking cyan	Update in progress
	Green	Update successful
	Red	Update not successful
Menu	Blinking green	Entering the menu (added as non-secure, S0, S2 non-authenticated)
	Blinking magenta	Entering the menu (added as Security S2 Authenticated)
	Blinking red	Entering the menu (not added to a Z-Wave network)
	White	Change or check single/double switch mode
	Green	Resetting energy consumption memory
	Yellow	Resetting to factory defaults

6.5 - Menu

Menu enables performing the Z-Wave network actions.

To use the menu:

1. Quickly, three times click, then press and hold one of the buttons. The device blinks to signal adding status. For more information, see 6.4 - Visual indications.
2. Release the button when the device signals a desired position with colour:
   - **White** – change or check single/double switch mode
   - **Green** – reset energy consumption memory
   - **Yellow** – reset to factory defaults
3. Quickly click the button to confirm.

7 RESETTING TO FACTORY DEFAULTS

Reset procedure restoring the device back to its factory settings, which means all information about the Z-Wave hub and user configuration are deleted. Resetting to factory defaults doesn't reset energy consumption memory.

Note
Resetting the device isn't the recommended way of removing the device from the Z-Wave network. Use reset procedure only if the primary hub is missing or inoperable. Certain device removal can be achieved by the procedure of removing described.

1. Quickly, three times click, then press and hold one of the buttons to enter the menu.
2. Release the button when the device glows yellow.
3. Quickly click the button to confirm.
4. After a few seconds the device is restarted, which is signalled with red LED colour.

8 POWER AND ENERGY METERING

The device enables the active power and energy consumption monitoring. Data is sent to the main Z-Wave hub. Measuring is carried out by the most advanced microcontroller technology, assuring maximum accuracy and precision (+/- 1% for loads greater than 10 W).

Electric active power – power that energy receiver is changing into a work or a heat. The unit of active power is Watt [W].

Note
Power measurement can contain mains voltage fluctuations within +/- 10%.

Electric energy – energy consumed by a device through a time period. Consumers of electricity in households are billed by suppliers on the basis of active power used in given unit of time. Most commonly measured in kilowatt-hour [kWh]. One kilowatt-hour is equal to one kilowatt of power consumed over period of one hour, 1 kWh = 1000 Wh.

To reset consumption memory:

1. Quickly, three times click, then press and hold one of the buttons to enter the menu.
2. Release button when the device glows green.
3. Quickly click the button. Device blinks two times green to confirm.

Note
The device stores periodically the consumption data in the device memory. Disconnecting the module from the power supply doesn't erase stored energy consumption data.

9 ASSOCIATIONS

Associations (linking devices) – direct control of other devices within the Z-Wave system network.

Assocations enable:
- reporting the device status to the Z-Wave hub with Lifeline group.
- creating simple automations by controlling other devices without participation of the main hub using groups assigned to actions on the device.

Note
Commands send to the 2nd, 3rd, 4th and 5th association groups reflect button operation according to device configuration. For example, turning the first channel on using button sends frame responsible for the same action.

For Single Switch Mode the device provides the association of three groups listed in the table below:

Table 3 - Walli On/Off-Control Unit - Association groups for Single Switch Mode

Association group	Name	Description
1st	Lifeline	Reports the device status and enables assigning a single device, the hub by default. Only one node can be assigned.
2nd	On/Off	Used for turning the associated devices on/off reflecting button operation (uses Basic command class)
3rd	Dimmer	Used for changing level of associated devices reflecting button operation (uses Switch Multilevel command class)

For Double Switch Mode the device provides the association of five groups listed in the table below:

Table 4 - Walli On/Off-Control Unit - Association groups for Double Switch Mode

Association group	Name	Description
1st	Lifeline	Reports the device status and enables assigning a single device, the hub by default. Only one node can be assigned.
2nd	On/Off (1)	Used for turning the associated devices on/off, reflects button operation for the 1st channel (uses Basic command class)
3rd	Dimmer (1)	Used for changing level of associated devices reflecting button operation for the 1st channel (uses Switch Multilevel command class)
4th	On/Off (2)	Used for turning the associated devices on/off, reflects button operation for the 2nd channel (uses Basic command class)
5th	Dimmer (2)	Used for changing level of associated devices reflecting button operation for the 2nd channel (uses Switch Multilevel command class)

Walli On/Off-Control Unit enables controlling five regular or multichannel devices per one association group with the exception of the **Lifeline** group, which is reserved solely for the hub and only one node can be assigned.

Table 5 - Walli On/Off-Control Unit - Association groups mapping

Root	Endpoint	Association group in endpoint
Association Group 2	Endpoint 1	Association Group 2
Association Group 3	Endpoint 1	Association Group 3
Association Group 4	Endpoint 2	Association Group 2
Association Group 5	Endpoint 2	Association Group 3

Table 6 - Walli On/Off-Control Unit - Commands sent to association groups				
Single Switch Mode - parameter 20 set to 1				
Button	**1 click**	**2 clicks**	**Hold**	**Release**
Button 1 and 2 (toggle)	Basic Set: the 2nd group, Multilevel Set: the 3rd group	Basic Set: the 2nd group, Multilevel Set: the 3rd group	Multilevel Start Level Change: the 3rd group	Multilevel Stop Level Change: the 3rd group
Single Switch Mode - parameter 20 set to 2				
Button 1 (ON), Button 2 (OFF)	Basic Set: the 2nd group, Multilevel Set: the 3rd group	Basic Set: the 2nd group, Multilevel Set: the 3rd group	Multilevel Start Level Change: the 3rd group	Multilevel Stop Level Change: the 3rd group
Double Switch Mode - parameter 20 set to 1				
Button 1 and 2 (toggle)	Basic Set: the 2nd and 4th group, Multilevel Set: the 3rd and 5th group	Basic Set: the 2nd and 4th group, Multilevel Set: the 3rd and 5th group	Multilevel Start Level Change: the 3rd and 5th group	Multilevel Stop Level Change: the 3rd and 5th group
Double Switch Mode - parameter 20 set to 2				
Button 1 (ON), Button 2 (OFF)	Basic Set: the 2nd and 4th group, Multilevel Set: the 3rd and 5th group	Basic Set: the 2nd and 4th group, Multilevel Set: the 3rd and 5th group	Multilevel Start Level Change: the 3rd and 5th group	Multilevel Stop Change: the 3rd and 5th group
Double Switch Mode - parameter 20 set to 3				
Button 1 and 2 (toggle)	Basic Set: the 2nd group, Multilevel Set: the 3rd group	Basic Set: the 2nd group, Multilevel Set: the 3rd group	Multilevel Start Level Change: the 3rd group	Multilevel Stop Change: the 3rd group
Button 1 and 2 (toggle)	Basic Set: the 4th group, Multilevel Set: the 5th group	Basic Set: the 4th group, Multilevel Set: the 5th group	Multilevel Start Level Change: the 5th group	Multilevel Stop Level Change: the 5th group
Double Switch Mode - parameter 20 set to 4				
Button 1 (ON)	Basic Set: the 2nd group, Multilevel Set: the 3rd group	Basic Set: the 4th group, Multilevel Set: the 5th group	Multilevel Start Level Change: the 3rd and 5th group	Multilevel Stop Level Change: the 3rd and 5th group
Button 2 (OFF)	Basic Set: the 2nd and 4th group, Multilevel Set: the 3rd and 5th group	-	Multilevel Start Level Change: the 3rd and 5th group	Multilevel Stop Level Change: the 3rd and 5th group

10 ADVANCED PARAMETERS

The device operation can be customized according to the user needs. The settings can be adjusted using Z-Wave hub to which the device is added. The way of adjusting them might differ depending on the hub.

In the Yubii Home interface parameters are presented as simple options in Advanced Settings of the device.

Table 7 - Walli On/Off-Control Unit - Advanced parameters				
Parameter	**Description**	**Available setting**	**Default setting**	**Parameter size**
1. Remember relays state	Determines the state of relays in case of power supply failure such as power outage. The parameter isn't relevant for outputs set to pulse mode (parameter 150/151 set to 2). For parameter 20 set to 3 in Single Switch mode, value 0 isn't supported.	**0** – relays remain switched off after restoring power **1** – restore remembered state of relays after restoring power	**1** (restore the state)	**1** [byte]
2. First channel – overload safety switch	Enables turning off the controlled device in case of exceeding the defined power. Controlled device can be turned back on using the button or sending a control frame.	**Single Switch Mode:** **0** – function disabled **10 - 45000** (1.0 - 4500.0 W, step 0.1 W) – power threshold **Double Switch Mode:** **0** – function disabled **10 - 36200** (1.0 - 3620.0 W, step 0.1 W) – power threshold	**0** (disabled)	**4** [bytes]
3. Second channel – overload safety switch	**Only in Double Switch Mode:** Enables turning off the controlled device in case of exceeding the defined power. Controlled device can be turned back on using the button or sending a control frame.	**0** – function disabled **10 - 36200** (1.0 - 3620.0 W, step 0.1 W) – power threshold	**0** (disabled)	**4** [bytes]
10. LED frame – power limit	Determines maximum active power. Exceeding it results in the LED frame flashing violet. Function is active only when parameter 11 is set to 8 or 9.	**Single Switch Mode:** **500 - 36800** (50.0 - 3680.0 W, step 0.1 W) – power threshold **Double Switch Mode:** **500 - 30000** (50.0 - 3000.0 W, step 0.1 W) – power threshold	**36800** (3680W) **30000** (3000W)	**4** [bytes]

Table 7 - Walli On/Off-Control Unit - Advanced parameters

Parameter	Description	Available setting	Default setting	Parameter size
11. LED frame – colour when ON	Defines the LED colour when the device is ON. When set to 8 or 9, LED frame colour changes depending on the measured power and parameter 10. Other colours are set permanently and don't depend on power consumption.	**0** – LED disabled **1** – white **2** – red **3** – green **4** – blue **5** – yellow **6** – cyan **7** – magenta **8** – colour changes smoothly depending on measured power **9** – colour changes in steps depending on measured power	**1** (white)	**1** [byte]
12. LED frame – colour when OFF	Defines the LED colour when the device is OFF	**0** – LED disabled **1** – white **2** – red **3** – green **4** – blue **5** – yellow **6** – cyan **7** – magenta	**0** (disabled)	**1** [byte]
13. LED frame – brightness	Enables adjusting the LED frame brightness	**0** – LED disabled **1 - 100** (1 - 100% brightness) **101** – brightness directly proportional to set level **102** – brightness inversely proportional to set level	**100** (100%)	**1** [byte]
20. Buttons operation	Defines how device buttons should control the channels	**Single Switch Mode:** **1** – the 1st and 2nd button toggle the load **2** – the 1st button turns the load ON, the 2nd button turns the load OFF **3** – device works in 2-way/3-way switch configuration	**1**	**1** [byte]
		Double Switch Mode: **1** – the 1st and 2nd button toggle both channels **2** – the 1st button turns the load ON, the 2nd button turns the load OFF **3** – the 1st button toggles the 1st channel, the 2nd button toggles the 2nd channel **4** – the 1st button single click turns the 1st channel ON, the 1st button double click turns the 2nd channel ON, the 2nd button single click turns both channels OFF	**3**	
24. Buttons orientation	Enables reversing the operation of the buttons	**0** – default - the 1st button controls the 1st channel, the 2nd button controls the 2nd channel **1** – reversed - the 1st button controls the 2nd channel, the 2nd button controls the 1st channel	**0**	**1** [byte]
25. Outputs orientation	Enables reversing the operation of Q1 and Q2 without changing the wiring, for example, in case of invalid connection. Changing orientation turns both outputs off.	**0** – default (Q1 - 1st channel, Q2 - 2nd channel) **1** – reversed (Q1 - 2nd channel, Q2 - 1st channel)	**0**	**1** [byte]
30. Alarm configuration - 1st slot	Determines to which alarm frames and how the device should react. The parameters consist of 4 bytes, three most significant bytes are set according to the official the Z-Wave protocol specification.	• **1B [MSB]** – Notification Type • **2B** – Notification Status • **3B** – Event/State Parameters • **4B [LSB]** – action: **0x00** – no action on output **0xX1** – turn ON **0xX2** – turn OFF **0xX3** – turn ON/OFF continuously **0x0X** – no action on LED frame **0x1X** – LED frame blinks red **0x2X** – LED frame blinks green **0x4X** – LED frame blinks blue **0x8X** – disable LED frame **0xFX** – LED activate alarm sequence (red-white-blue)	**[0x00, 0x00, 0x00, 0x00]** (disabled)	**4** [bytes]
31. Alarm configuration - 2nd slot			**[0x05, 0xFF, 0x00, 0x00]** (Water Alarm, any notification, no action)	
32. Alarm configuration - 3rd slot			**[0x01, 0xFF, 0x00, 0x00]** (Smoke Alarm, any notification, no action)	
33. Alarm configuration - 4th slot			**[0x02, 0xFF, 0x00, 0x00]** (CO Alarm, any notification, no action)	
34. Alarm configuration - 5th slot			**[0x04, 0xFF, 0x00, 0x00]** (Heat Alarm, any notification, no action)	

Table 7 - Walli On/Off-Control Unit - Advanced parameters

Parameter	Description	Available setting	Default setting	Parameter size
35. Alarm configuration – duration	Defines duration of alarm sequence.When time set using this parameter elapses, an alarm is cancelled, LED frame and relay restore normal operation, but don't recover state from before the alarm.	**0** – infinite **1 - 32400** (1 s - 9 h, 1 s step) – duration	**600** (10min)	**2** [byte]
40. First button – scenes sent	Determines which actions result in sending scene IDs assigned to them. Values can be combined (e.g. 1+2=3 means that scenes for single and double click are sent). Enabling scenes for triple click disables entering the device in learn mode by triple clicking.	**1** – Key pressed 1 time **2** – Key pressed 2 times **4** – Key pressed 3 times **8** – Key hold down and key released	**0** (no scenes)	**1** [byte]
41. Second button – scenes sent				
60. Power reports – include self-consumption	Determines whether the power measurements for Endpoint 1 should include power consumed by the device itself	**0** – Self-consumption not included **1** – Self-consumption included	**0** (not included)	**1** [byte]
61. Power reports for first channel– on change	Defines minimal change (from the last reported) in measured power that results in sending new report. For loads under 50 W the parameter is irrelevant, report is sent every 5 W change.	**0** – reporting on change disabled **1 - 500** (1 - 500%, 1% step) – minimal change	**15** (15%)	**2** [bytes]
62. Power reports for first channel– periodic	Defines reporting interval for measured power. Periodic reports are independent from changes in value (parameter 61).	**0** – periodic reports disabled **30 - 32400** (30 s - 9 h, 1 s step) – time interval	**3600** (1h)	**2** [bytes]
63. Power reports for second channel– on change	**Only in Double Switch Mode:** Defines minimal change (from the last reported) in measured power that results in sending new report. For loads under 50 W the parameter is irrelevant, report is sent every 5 W change.	**0** – reporting on change disabled **1 - 500** (1 - 500%, 1% step) – minimal change	**15** (15%)	**2** [bytes]
64. Power reports for second channel– periodic	**Only in Double Switch Mode:** Defines reporting interval for measured power. Periodic reports are independent from changes in value (parameter 63).	**0** – periodic reports disabled **30 - 32400** (30 s - 9 h, 1 s step) – time interval	**3600** (1h)	**2** [bytes]
65. Energy reports for first channel – on change	Defines minimal change (from the last reported) in measured energy that results in sending new report.	**0** – reporting on change disabled **1 - 500** (0.01 - 5 kWh, 0.01 kWh step) – minimal change	**10** (0.1 kWh)	**2** [bytes]
66. Energy reports for first channel – periodic	Defines reporting interval for measured energy. Periodic reports are independent from changes in value (parameter 65).	**0** – periodic reports disabled **30 - 32400** (30 s - 9 h, 1 s step) – time interval	**3600** (1h)	**2** [bytes]
67. Energy reports for second channel – on change	**Only in Double Switch Mode:** Defines minimal change (from the last reported) in measured energy that results in sending new report.	**0** – reporting on change disabled **1 - 500** (0.01 - 5 kWh, 0.01 kWh step) – minimal change	**10** (0.1 kWh)	**2** [bytes]
68. Energy reports for second channel – periodic	**Only in Double Switch Mode:** Defines reporting interval for measured energy. Periodic reports are independent from changes in value (parameter 67).	**0** – periodic reports disabled **30 - 32400** (30 s - 9 h, 1 s step) – time interval	**3600** (1h)	**2** [bytes]
150. First channel – operating mode	Enables choosing operating for the 1st channel. For parameter 20 set to 3 in the Single Switch mode, delayed OFF (value 1) isn't supported.	**0** – standard operation **1** – delayed OFF **2** – single pulse	**0**	**1** [byte]
151. Second channel – operating mode	Enables choosing operating for the 2nd channel.			
152. First channel - reaction to switch for delayed OFF / pulse modes	Determines how the device in timed mode reacts to pushing the button for 1st channel. The parameter is relevant only for button toggles modes (parameter 20 set to 1 or 3). For parameter 20 set to 3 in Single Switch mode, only value 0 (set default state) is supported.	**0** – cancel mode and set default state **1** – no reaction - mode runs until it ends **2** – reset timer - start counting from the beginning	**0**	**1** [byte]
153. Second channel - reaction to switch for delayed OFF /pulse modes	**Only in Double Switch Mode:** Determines how the device in timed mode reacts to pushing the button for the 2nd channel. The parameter is relevant only for button toggles modes (parameter 20 set to 1 or 3).		**0**	**1** [byte]

Table 7 - Walli On/Off-Control Unit - Advanced parameters				
Parameter	**Description**	**Available setting**	**Default setting**	**Parameter size**
154. First channel - time parameter for delayed OFF / pulse modes	Enables setting time parameter used in timed modes for the 1st channel (parameter 150). Delay time for switching off or duration of the pulse. For paremeter 20 set to 3 in Single Switch mode and parameter 150 set to 2 (single pulse), this parameter shouldn't be lower than 5 (5s).	**0 – 0.1 second** **1 - 32000** (1-32000 s, 1 s step) – time parameter	**50** (50 s)	**2** [bytes]
155. Second channel - time parameter for delayed OFF / pulse modes	**Only in Double Switch Mode:** Set time parameter used in timed modes for the 2nd channel (parameter 151). Delay time for switching off or duration of the pulse.			**2** [bytes]
156. First channel – Switch ON value sent to 2nd and 3rd association groups	Defines the value sent with Switch ON command to devices associated in the 2nd and 3rd association group for manual changes of Endpoint 1 state.	**0 - 99, 255**	**255**	**2** [bytes]
157. First channel – Switch OFF value sent to 2nd and 3rd association groups	Defines the value sent with Switch OFF command to devices associated in the 2nd and 3rd association group for manual changes of Endpoint 1 state.		**0**	**2** [bytes]
158. First channel – Double Click value sent to 2nd and 3rd association groups	Defines the value sent with Double Click command to devices associated in the 2nd and 3rd association group for manual changes of Endpoint 1 state.		**99**	**2** [bytes]
159. Second channel – Switch ON value sent to 4th and 5th association groups	**Only in Double Switch Mode:** Defines the value sent with Switch ON command to the devices associated in the 4th and 5th association group for manual changes of Endpoint 2 state		**255**	**2** [bytes]
160. Second channel – Switch OFF value sent to 4th and 5th association groups	**Only in Double Switch Mode:** Defines the value sent with Switch OFF command to the devices associated in the 4th and 5th association group for manual changes of Endpoint 2 state		**0**	**2** [bytes]
161. Second channel – Double Click value sent to 4th and 5th association groups	**Only in Double Switch Mode:** Defines the value sent with Double Click command to the devices associated in the 4th and 5th association group for manual changes of Endpoint 2 state.		**99**	**2** [byte]

11 Z-WAVE SPECIFICATION

Endpoint 1:
Generic Device Class: GENERIC_TYPE_SWITCH_BINARY
Specific Device Class: SPECIFIC_TYPE_POWER_SWITCH_BINARY
Description: switch 1

Endpoint 2:
Generic Device Class: GENERIC_TYPE_SWITCH_BINARY
Specific Device Class: SPECIFIC_TYPE_POWER_SWITCH_BINARY
Description: switch 2

Table 8 - Walli On/Off-Control Unit - Supported Command Classes

No.	Command Class	Version	Secure
1.	COMMAND_CLASS_ZWAVEPLUS_INFO [0x5E]	V2	
2.	COMMAND_CLASS_SWITCH_BINARY [0x25]	V1	YES
3.	COMMAND_CLASS_ASSOCIATION [0x85]	V2	YES
4.	COMMAND_CLASS_MULTI_CHANNEL_ASSOCIATION [0x8E]	V3	YES
5.	COMMAND_CLASS_ASSOCIATION_GRP_INFO [0x59]	V2	YES
6.	COMMAND_CLASS_TRANSPORT_SERVICE [0x55]	V2	
7.	COMMAND_CLASS_VERSION [0x86]	V2	YES
8.	COMMAND_CLASS_MANUFACTURER_SPECIFIC [0x72]	V2	YES
9.	COMMAND_CLASS_DEVICE_RESET_LOCALLY [0x5A]	V1	YES
10.	COMMAND_CLASS_POWERLEVEL [0x73]	V1	YES
11.	COMMAND_CLASS_SECURITY [0x98]	V1	
12.	COMMAND_CLASS_SECURITY_2 [0x9F]	V1	
13.	COMMAND_CLASS_SUPERVISION [0x6C]	V1	
14.	COMMAND_CLASS_METER [0x32]	V3	YES
15.	COMMAND_CLASS_CONFIGURATION [0x70]	V1	YES
16.	COMMAND_CLASS_CRC_16_ENCAP [0x56]	V1	
17.	COMMAND_CLASS_NOTIFICATION [0x71]	V8	YES
18.	COMMAND_CLASS_PROTECTION [0x75]	V2	YES
19.	COMMAND_CLASS_MULTI_CHANNEL [0x60]*	V4	YES
20.	COMMAND_CLASS_CENTRAL_SCENE [0x5B]	V3	YES
21.	COMMAND_CLASS_FIRMWARE_UPDATE_MD [0x7A]	V4	YES
22.	COMMAND_CLASS_APPLICATION_STATUS [0x22]	V1	
23.	COMMAND_CLASS_BASIC [0x20]	V1	YES

* only in Double Switch Mode

Table 9 - Walli On/Off-Control Unit - Multichannel Command Class			
No.	**Command Class**	**Version**	**Secure**
Endpoint 1			
1.	COMMAND_CLASS_ZWAVEPLUS_INFO [0x5E]	V2	
2.	COMMAND_CLASS_SWITCH_BINARY [0x25]	V1	YES
3.	COMMAND_CLASS_ASSOCIATION [0x85]	V2	YES
4.	COMMAND_CLASS_MULTI_CHANNEL_ASSOCIATION [0x8E]	V3	YES
5.	COMMAND_CLASS_ASSOCIATION_GRP_INFO [0x59]	V2	YES
6.	COMMAND_CLASS_SECURITY [0x98]	V1	
7.	COMMAND_CLASS_SECURITY_2 [0x9F]	V1	
8.	COMMAND_CLASS_SUPERVISION [0x6C]	V1	
9.	COMMAND_CLASS_METER [0x32]	V3	YES
10.	COMMAND_CLASS_NOTIFICATION [0x71]	V8	YES
11.	COMMAND_CLASS_PROTECTION [0x75]	V2	YES
12.	COMMAND_CLASS_APPLICATION_STATUS [0x22]	V1	
Endpoint 2			
13.	COMMAND_CLASS_ZWAVEPLUS_INFO [0x5E]	V2	
14.	COMMAND_CLASS_SWITCH_BINARY [0x25]	V1	YES
15.	COMMAND_CLASS_ASSOCIATION [0x85]	V2	YES
16.	COMMAND_CLASS_MULTI_CHANNEL_ASSOCIATION [0x8E]	V3	YES
17.	COMMAND_CLASS_ASSOCIATION_GRP_INFO [0x59]	V2	YES
18.	COMMAND_CLASS_SECURITY [0x98]	V1	
19.	COMMAND_CLASS_SECURITY_2 [0x9F]	V1	
20.	COMMAND_CLASS_SUPERVISION [0x6C]	V1	
21.	COMMAND_CLASS_METER [0x32]	V3	YES
22.	COMMAND_CLASS_NOTIFICATION [0x71]	V8	YES
23.	COMMAND_CLASS_PROTECTION [0x75]	V2	YES
24.	COMMAND_CLASS_APPLICATION_STATUS [0x22]	V1	

The device uses Notification Command Class to report different events to the hub (“Lifeline” group).

Table 10 - Walli On/Off-Control Unit - Notification Command Class				
Notification Type	**Event**	**Parameter**	**Status**	**In endpoints**
Power Management [0x08]	Over-current detected [0x06/V3]		0xFF – enable (non-changeable)	Root, Endpoint 1*, Endpoint 2*
Power Management [0x08]	Over-load detected [0x08]		0xFF – enable (non-changeable)	Root, Endpoint 1*, Endpoint 2*
System [0x09]	System hardware failure with manu-facturer proprietary failure code [0x03]	MP code: 0x01 [device overheat]	0xFF – enable (non-changeable)	Root, Endpoint 1*

* only in Double Switch Mode

Table 11 - Walli On/Off-Control Unit - Meter Command Class				
Meter Type	**Scale**	**Rate Type**	**Precision**	**Size**
Electric [0x01]	Electric_kWh [0x00] (default)	Import [0x01]	2	4
Electric [0x01]	Electric_W [0x02]	Import [0x01]	1	2

Protection Command Class enables preventing local or remote control of the outputs.

Table 12 - Walli On/Off-Control Unit - Protection Command Class			
Type	**State**	**Description**	**Hint**
Local	0	Unprotected - The device isn't protected, and may be operated normally with the user interface.	Inputs connected with outputs.
Local	2	No operation possible – button cannot change relay state, any other functionality is available (menu).	Inputs disconnected from outputs.
RF	0	Unprotected - The device accept and respond to all RF Commands.	Outputs can be controlled with Z-Wave.
RF	1	No RF control – command class basic and switch binary are rejected, every other command class is handled.	Outputs can't be controlled with Z-Wave.

12 PARTS COMPATIBILITY

Table 13 - Walli On/Off-Control Unit - Available Nice parts		
Name	**Symbol**	**Included in Walli On/Off-Control**
Walli Double Switch Unit	FG-WDSEU221-AS-8001	x
Switch Button Adapter	FG-WDSEU221-PP-0007	
Mounting Frame NICE/G55	FG-Wx-AS-4001	x
Mounting Frame LC	FG-Wx-AS-4002	
Mounting Frame SO	FG-Wx-AS-4003	
Switch Button with Lightguide (white)	FG-WDSEU221-AS-8100	x
Single Cover Plate (white)	FG-Wx-PP-0001	x
Double Cover Plate (white)	FG-Wx-PP-0003	
Triple Cover Plate (white)	FG-Wx-PP-0004	

Table 14 - Walli On/Off-Control Unit - Required Nice parts for G55 (only with non-metalised outer surface: Standard 55, E2, Event, Event Clear) covers	
Name	**Symbol**
Walli Double Switch Unit	FG-WDSEU221-AS-8001
Switch Button Adapter	FG-WDSEU221-PP-0007
Mounting Frame NICE/G55	FG-Wx-AS-4001

Table 15 - Walli On/Off-Control Unit - Required Nice parts for LC selected covers	
Name	**Symbol**
Walli Double Switch Unit	FG-WDSEU221-AS-8001
Switch Button Adapter	FG-WDSEU221-PP-0007
Mounting Frame LC	FG-Wx-AS-4002

Table 16 - Walli On/Off-Control Unit - Required Nice parts for SO selected covers	
Name	**Symbol**
Walli Double Switch Unit	FG-WDSEU221-AS-8001
Mounting Frame SO	FG-Wx-AS-4003

13 PRODUCT DISPOSAL

This product is an integral part of the automation and therefore must be disposed together with the latter. At the end of the product lifetime, the disassembly and scrapping operations must be performed by qualified personnel.
This product is made of various types of material, some of which can be recycled while others must be scrapped. Seek information on the recycling and disposal systems envisaged by the local regulations in your area for this product category.



As indicated by the symbol alongside, disposal of this product in domestic waste is strictly prohibited. Separate the waste into categories for disposal, according to the methods envisaged by current legislation in your area, or return the product to the retailer when purchasing a new version.

⚠ CAUTION!

- Some parts of the product may contain pollutant or hazardous substances which, if disposed of into the environment, may cause serious damage to the environment or physical health.
- Local legislation may envisage serious fines in the event of abusive disposal of this product.

14 DECLARATION OF CONFORMITY

Hereby, Nice S.p.A., declares that the radio equipment type Walli On/Off-Control Unit is in compliance with Directive 2014/53/EU. The full text of the EU Declaration of Conformity is available at: http://www.niceforyou.com/en/support.

IS0997A00EN_07-07-2026

Nice SpA
Oderzo TV Italia
info@niceforyou.com