Walli

Roll-Control

Remote control of roller blinds, venetian blinds, pergolas, curtains, awnings and blind motors with electronic or mechanical limit switches

Compatible with Yubii® ECOSYSTEM

EN - Instructions and warnings for installation and use

v1.6

Nice

1 WARNINGS AND GENERAL PRECAUTIONS

- **This manual contains important instructions and warnings for personal safety.** Carefully read all parts of this manual. If in doubt, suspend installation immediately and contact Nice Technical Assistance.
- **Using this product for different purposes than specified in this manual is strictly forbidden!**
- **All installation and connection operations must be performed exclusively by suitably qualified and skilled personnel with the unit disconnected from the mains power supply.**
- The product packaging materials must be disposed of in full compliance with local regulations.
- Never apply modifications to any part of the device. Operations other than those specified can cause malfunctions. The manufacturer declines all liability for damage caused by makeshift modifications to the product.
- Never place the device near the sources of heat or expose to naked flames. These actions can damage the product and cause malfunctions.
- The device is designed to operate in an electrical home installation. Faulty connection or use can result in a fire or electric shock.
- Even when the device is turned off, voltage can be present at its terminals. Any maintenance introducing changes to the configuration of connections or the load must be always performed with a disabled fuse.
- To avoid risk of electrical shock, don't operate the device with wet or moist hands.
- The manufacturer will not be held responsible for any damage or loss of warranty privileges for other connected devices if the connection isn't compliant with their manuals.
- Don't use in damp or wet locations, near a bathtub, sink, shower, swimming pool, or anywhere else where water or moisture are present.
- It isn't recommended to operate all of the roller blinds simultaneously. For safety reasons, at least one roller blind should be controlled independently, providing safe escape route in case of emergency.
- This product isn't a toy. Keep away from children and animals!

2 PRODUCT DESCRIPTION

Walli Roll-Control is a smart wall switch designed to control motors of roller blinds, awnings, venetian blinds and other single phase, AC powered devices with the Z-Wave® network.

It measures active power and energy consumed by the controlled load.

You can install it with a provided cover plate and switch button or other compatible.

2.1 - Main features

- Can be used with:
  - » Roller blinds
  - » Venetian blinds
  - » Awnings
  - » Blind motors with electronic or mechanical limit switches
- Can be used with Walli covers or other compatible covers such as G55, LC, SO
- Supports Z-Wave® network Security Modes: S0 with AES-128 encryption and S2 Authenticated with PRNG-based encryption.
- Works as a Z-Wave® signal repeater (all non-battery operated devices within the network act as repeaters to increase reliability of the network).

2.2. - Fully compatible Z-Wave Plus® device

This device can be used with all devices certified with the Z-Wave Plus® certificate and should be compatible with such devices produced by other manufacturers. All non-battery operated devices within the network will act as repeaters to increase reliability of the network. The device is a Security Enabled Z-Wave Plus® product and a Security Enabled Z-Wave® Controller needs to be used to fully utilize the product.

2.3 - Technical specifications

Walli Roll-Control is produced by Nice S.p.A. (TV).

Note

All technical specifications stated in this section refer to an ambient temperature of 20 °C (± 5 °C).

Nice S.p.A. reserves the right to apply modifications to the product at any time when deemed necessary, while maintaining the same functionalities and intended use.

Table 1 - Walli Roll-Control - Hardware parameters	
Parameter	**Values / types**
Power supply	110 - 230 V~ 50/60 Hz
Rated load current	• 4A for motors with compensated power factor (inductive loads) • 13A for resistive loads
Compatible load types	• Ⓜ Single-phase AC motors • Resistive loads
Required limit switches	Electronic or mechanic
Recommended external overcurrent protection	10 A type B circuit breaker (EU) 13 A type B circuit breaker (Sweden)
For installation in boxes	Ø ≥ 60 mm, depth ≥ 40 mm
Recommended wires	cross-section area between 1.5 - 4.0 mm^2, stripped 11.5 - 13 mm of insulation
Radio frequency band	868.0–868.6MHz 869.7–870.0MHz
Max. transmitting power	+6dBm
Range	• up to 50 m outdoors • up to 40 m indoors Depending on the terrain and building structure
Radio protocol	Z-Wave (500 series chip)
Ambient humidity	10 – 95% RH without condensation
Operational temperature	0 - 35°C
Dimensions (Height × Width × Depth)	86 x 86 x 51 mm
Compliance with EU directives	RoHS 2011/65/EU RED 2014/53/EU

Note
Radio frequency of individual device must be same as your Z-Wave hub. Check information on the box or consult your dealer if you aren't sure.

3 INSTALLATION

3.1 - Safety rules

- ⚠ **Connecting the device in a manner inconsistent with this manual may cause risk to health, life or material damage.**
- Don't power the device before fully assembling it in the mounting box.
- Connect only in accordance with one of the figures.
- Install only in flush mounting boxes compliant with a relevant national safety standards and with depth no less than 40 mm.
- Don't connect devices which aren't compliant with the specification or relevant safety standards.
- Don't connect heating devices.
- Don't connect SELV or PELV circuits.

3.2 - Preparing for installation

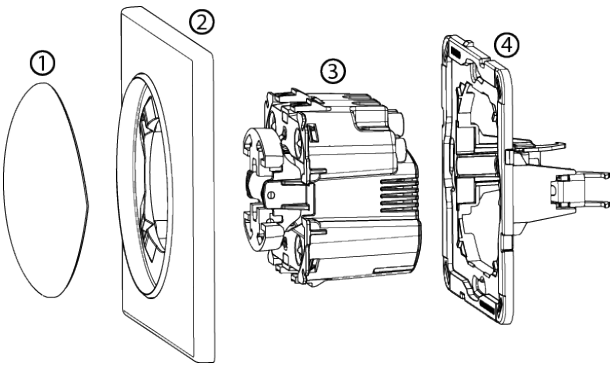

Figure 1: Device parts

Notes for Figure 1
1 – switch button
2 – cover plate
3 – unit (device)
4 – mounting frame

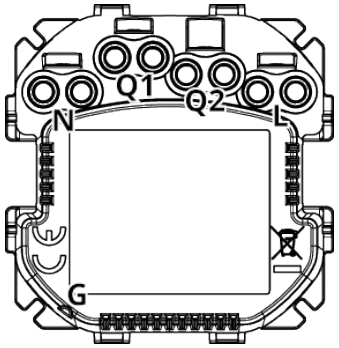

Figure 2: Device terminals

Notes for Figure 2

N – terminal for neutral wire
Q1 – the 1st output terminal motor
Q2 – the 2nd output terminal motor
L – terminal for live wire
G – groove used to measure wire length

Prepare wires by removing 11.5 -13 mm of insulation from their ends. You can use groove on the side of the unit to measure the length.

When installing with NICE or G55 cover plates:

1. Pull out the switch button.
2. Take off the cover plate.

When installing with LC or SO cover plates:

1. Pull out the original switch button.
2. Take off the original cover plate.
3. Dismount the original mounting frame.
4. Snap the new mounting frame.

Note
Additional mounting frames are sold separately. Make sure you have all required parts when installing with covers other than Nice.

3.3 - Electrical connection

1. Switch off the mains voltage (disable the fuse).
2. Connect with one of the figures below:

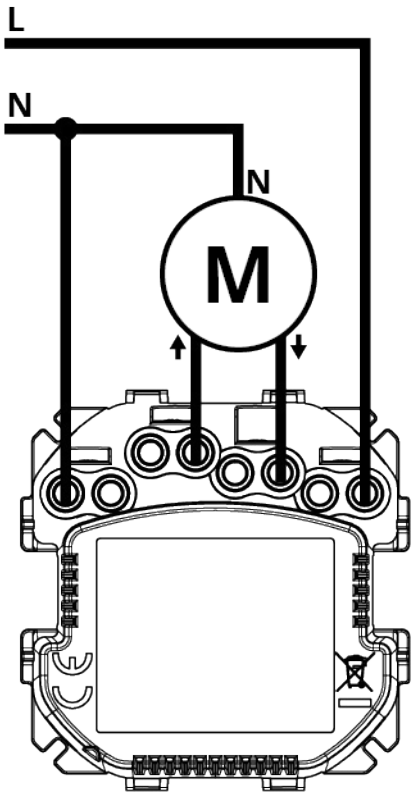

Figure 3: Example connection with roller blind motor

3. Verify correctness of connection.
4. Tighten the terminal screws using PH1 screwdriver.

3.4 - Assembling device

- When installing the device in the mounting box orient the device with terminal screws going up or to the left (for horizontal button position) to ensure button order.
- When installing with covers other than Nice, we recommend disabling the LED by changing parameter 13 to 0.

3.4.1 - Installation with Nice cover

1. Insert the device with mounting frame into the mounting box and secure with mounting claws and screws.
2. Snap the cover plate to the device.
3. Snap the switch button to the device.

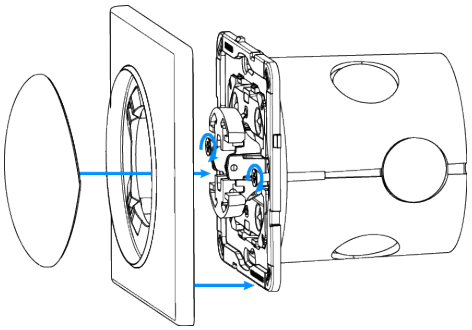

Figure 4: Installation with Nice cover

3.4.2 - Installation with G55 cover

1. Insert the device with mounting frame into the mounting box and secure with mounting claws and screws.
2. Snap the new cover plate to the device.
3. Snap the switch button adapter (sold separately) to the device.
4. Snap the new switch button to the device.

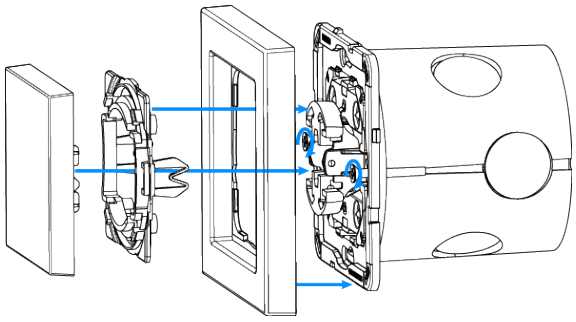

Figure 5: Installation with G55 cover

3.4.3 - Installation with LC cover

1. Insert the device with mounting frame (sold separately) into the mounting box and secure with mounting claws and screws.
2. Snap the switch button adapter (sold separately) to the device.
3. Snap the new inner cover plate to the device.
4. Snap the new outer cover plate to the device.
5. Snap the new switch button to the device.

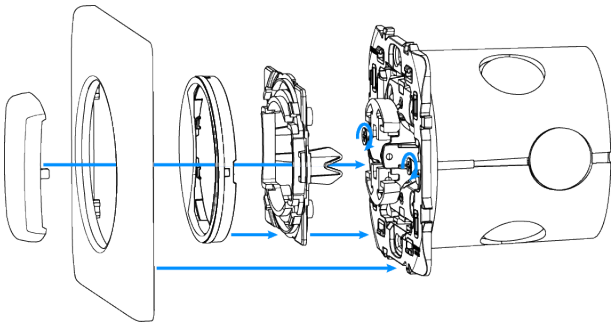

Figure 6: Installation with LC cover

3.4.4 - Installation with SO cover

1. Insert the device with mounting frame (sold separately) into the mounting box and secure with mounting claws and screws.
2. Snap the new cover plate to the device.
3. Snap the new switch button to the device.

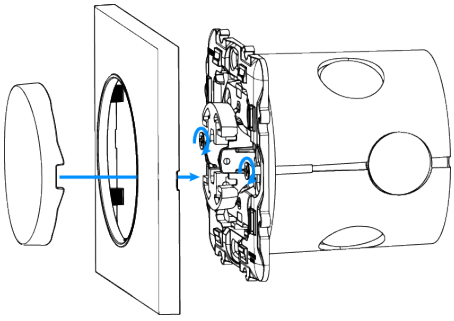

Figure 7: Installation with SO cover

3.5 - Activating device

1. If the device is fully assembled, switch on the mains voltage.
2. LED ring light means the device is powered and can be added to the Z-Wave network.

4 ADDING TO Z-WAVE NETWORK

Adding (Inclusion) – Z-Wave device learning mode, which enables adding the device to the existing Z-Wave network.

4.1 - Adding manually

1. Power the device.
2. Set the main hub in the (Security/non-Security Mode) add mode. For more information, see the hub manual.
3. Quickly, three times click one of the buttons.
4. If you are adding in Security S2 Authenticated, input the underlined part of the device security key (DSK), which is labelled on the bottom of the box.
5. LED starts blinking yellow, wait for the adding process to end.
6. Adding result is confirmed with the Z-Wave hub message and the LED frame:
   - **Green** – successful (non-secure, S0, S2 non-authenticated)
   - **Magenta** – successful (Security S2 Authenticated)
   - **Red** – not successful

4.2 - Adding using SmartStart

With the **SmartStart** function enabled products can be added into the Z-Wave network by scanning the Z-Wave QR Code present on the product with a hub providing the SmartStart inclusion. A SmartStart product is added automatically within 10 minutes of being switched on in the network range.

Note
To use the SmartStart function your hub needs to support Security S2. For more information, see the hub manual.

1. Enter the full DSK string code to your hub. If your hub is capable of QR scanning, scan the QR code placed on the label on the bottom of the box.
2. Power the device.
3. Wait for the adding process to start (up to a few minutes), which is signalled with yellow LED blinking.
4. Adding result is confirmed with the Z-Wave hub message and the LED frame:
   - **Green** – successful (non-secure, S0, S2 non-authenticated)
   - **Magenta** – successful (Security S2 Authenticated)
   - **Red** – not successful

Note
In case of problems with adding the device, reset the device and repeat the adding procedure.

5 REMOVING FROM Z-WAVE NETWORK

Removing (Exclusion) – Z-Wave device learning mode, which enables removing the device from the existing Z-Wave network. Removing also results in resetting the device to factory defaults.

1. Power the device.
2. Set the main hub in the remove mode. For more information, see the hub manual.
3. Quickly, three times click one of the buttons.
4. LED starts blinking yellow, wait for the removing process to end.
5. Successful removing is confirmed with the Z-Wave hub message and red LED colour.

Note
Removing device isn't possible if the central scene notifications have been activated with parameters 40 and 41.

6 CALIBRATION

Calibration is a process during which a device learns the position of the limit switches and a motor characteristic.
Calibration is mandatory for the device to correctly recognize a roller blind position.
The procedure consists of an automatic, full movement between the limit switches (up, down, and up again).

Button description:

▲ – the 1st button, for up movement
▼ – the 2nd button, for down movement

6.1 - Automatic positioning of standard roller blind using the menu

1. Set parameter 151 to 1 (default).
2. Quickly, three times click, press, and hold one of the buttons to enter the menu.
3. Release button when the device glows white.
4. Quickly click the button to confirm.
5. The device performs the calibration process, completing full cycle – up, down and up again. During the calibration the LED frame blinks white.
6. Test whether the positioning works correctly.

6.2 - Automatic positioning of standard roller blind using the parameters

1. Set parameter 151 to 1 (default).
2. Set parameter 150 to 2.
3. The device performs the calibration process, completing full cycle – up, down and up again. During the calibration the LED frame blinks white.
4. Test whether the positioning works correctly.

6.3 - Manual positioning of slats in the Venetian blinds mode

1. Set parameter 151 to 2.
2. Calibrate blinds as standard ones. For more information, see parts 6.1 and 6.2.

   Note
   By default, time of transition between extreme positions is set to 150 (1.5 seconds) with parameter 152.
3. Turn slats between extreme positions by holding ▲ or ▼ button:

- if after full cycle a blind starts moving up or down - decrease value of parameter 152.
- if after full cycle the slats doesn't reach end positions - increase value of parameter 152.

4. Repeat previous step until satisfactory positioning is achieved.
5. Test whether the positioning works correctly. Correctly configured slats shouldn't force the blinds to move up or down.

6.4 - Manual positioning of roller blind with built-in driver

1. Set parameter 151 to 5 or 6.
2. By default, time of transition between extreme positions is set to 6000 (60 seconds) in parameters 156 and 157.
3. Move roller blinds between extreme positions by clicking ▲ or ▼ switch:
   - if roller blind stops before reaching top - increase value of parameter 156.
   - if roller blind doesn't stop after reaching top - decrease value of parameter 156.
   - If roller blind stops before reaching bottom - increase value of parameter 157.
   - If roller blind doesn't stop after reaching bottom - decrease value of parameter 157.
4. Repeat previous step until satisfactory positioning is achieved.
5. Test whether the positioning works correctly.

7 OPERATING DEVICE

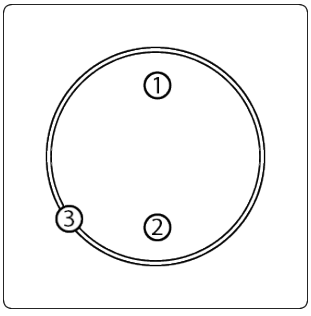

Figure 8: Controls

Notes for Figure 8

1 – the first/UP/▲ button
2 – the second/DOWN/▼ button
3 – LED ring

7.1 - Button control

Operating roller blinds (configured with parameter 24)

- Click ▲ to initiate up movement
- Click ▼ to initiate down movement

If the blind is moving, clicking any button, stops the movement.

Operating slats of venetian blinds

- Hold ▲ to initiate slats rotation up
- Hold ▼ to initiate slats rotation down

Release to stop the movement.

Other actions

- 3 x click – start learn mode to add/remove to/from the Z-Wave network
- 1, 2, 3 x click/hold/release – activate scene in the hub for specific action (requires prior configuration using parameters 40 and 41)
- 3 x click, then press, and hold – enter the menu

7.2 - Visual indications

The built-in LED light shows current device status.

Table 2 - Walli Roll-Control - Responses to button actions

Action	Colour	Meaning
After powering the device	Green	Device added to a Z-Wave network (non-secure, S0, S2 non-authenticated)
	Magenta	Device added to a Z-Wave network (Security S2 Authenticated)
	Red	Device not added to a Z-Wave network
State of the device	White	Load turned ON (configurable with parameters 11 and 12)
Update	Blinking cyan	Update in progress
	Green	Update successful
	Red	Update not successful
Menu	Blinking green	Entering the menu (added as non-secure, S0, S2 non-authenticated)
	Blinking magenta	Entering the menu (added as Security S2 Authenticated)
	Blinking red	Entering the menu (not added to a Z-Wave network)
	White	Start calibration
	Green	Resetting energy consumption memory
	Yellow	Resetting to factory defaults

7.3 - Menu

Menu enables performing the Z-Wave network actions.

To use the menu:

1. Quickly, three times click, then press and hold one of the buttons. The device blinks to signal adding status. For more information, see 7.2 - Visual indications.
2. Release the button when the device signals a desired position with colour:
   - **White** – start calibration
   - **Green** – reset energy consumption memory
   - **Yellow** – reset to factory defaults
3. Quickly click the button to confirm.

8 RESETTING TO FACTORY DEFAULTS

Reset procedure restoring the device back to its factory settings, which means all information about the Z-Wave hub and user configuration are deleted. Resetting to factory defaults doesn't reset energy consumption memory.

Note

Resetting the device isn't the recommended way of removing the device from the Z-Wave network. Use reset procedure only if the primary hub is missing or inoperable. Certain device removal can be achieved by the procedure of removing described.

1. Quickly, three times click, then press and hold one of the buttons to enter the menu.
2. Release the button when the device glows yellow.
3. Quickly click the button to confirm.
4. After a few seconds the device is restarted, which is signalled with red LED colour.

9 POWER AND ENERGY METERING

The device enables the active power and energy consumption monitoring. Data is sent to the main Z-Wave hub. Measuring is carried out by the most advanced microcontroller technology, assuring maximum accuracy and precision (+/- 1% for loads greater than 10 W).

Electric active power – power that energy receiver is changing into a work or a heat. The unit of active power is Watt [W].

Note
Power measurement can contain mains voltage fluctuations within +/- 10%.

Electric energy – energy consumed by a device through a time period. Consumers of electricity in households are billed by suppliers on the basis of active power used in given unit of time. Most commonly measured in kilowatt-hour [kWh]. One kilowatt-hour is equal to one kilowatt of power consumed over period of one hour, 1 kWh = 1000 Wh.

To reset consumption memory:

1. Quickly, three times click, then press and hold one of the buttons to enter the menu.
2. Release button when the device glows green.
3. Quickly click the button. Device blinks two times green to confirm.

Note
The device stores periodically the consumption data in the device memory. Disconnecting the module from the power supply doesn't erase stored energy consumption data.

10 ASSOCIATIONS

Association (linking devices) – direct control of other devices within the Z-Wave system network.

Associations enable:

- reporting the device status to the Z-Wave hub with Lifeline group.
- creating simple automations by controlling other devices without participation of the main hub using groups assigned to actions on the device.

Note
Commands send to the 2nd and 3rd association groups reflect button operation according to device configuration. For example, turning the first channel on using button sends frame responsible for the same action.

Table 4 - Walli Roll-Control - Association groups

Association group	Name	Description
1st	Lifeline	Reports the device status and enables assigning a single device, the hub by default. Only one node can be assigned.
2nd	Roller Shutter	Assigned to shutter position control – UP/DOWN, uses Switch Multilevel command class
3rd	Slats	Assigned to slats position control – UP/DOWN, uses Switch Multilevel command class

Walli Roll-Control enables controlling five regular or multichannel devices per one association group with the exception of the **Lifeline** group, which is reserved solely for the hub and only one node can be assigned.

Table 5 - Walli Roll-Control - Association groups mapping

Root	Endpoint	Association group in endpoint
Association Group 2	Endpoint 1	Association Group 2
Association Group 3	Endpoint 2	Association Group 2

Table 6 - Walli Roll-Control - Switch Multilevel commands sent to association groups

Parameter settings	Button	Click	Hold	Release
Parameter 151 set to 1, 5, or 6	Button 1 and 2	Start/Stop Level Change: the 2nd group	Start Level Change: the 3rd group	Stop Level Change: the 3rd group
Parameter 151 set to 2	Button 1 and 2	Start/Stop Level Change: the 2nd group	-	Set Level: the 3rd group

11 ADVANCED PARAMETERS

The device operation can be customized according to the user needs. The settings can be adjusted using Z-Wave hub to which the device is added. The way of adjusting them might differ depending on the hub.

In the Yubii Home interface parameters are presented as simple options in Advanced Settings of the device.

Table 7 - Walli Roll-Control - Advanced parameters

Parameter	Description	Available setting	Default setting	Parameter size
11. LED frame – colour when moving	Defines the LED colour when the motor is running	**0** – LED disabled **1** – white **2** – red **3** – green **4** – blue **5** – yellow **6** – cyan **7** – magenta	**1** (white)	**1** [byte]
12. LED frame – colour when not moving	Defines the LED colour when the motor isn't running		**0** (disabled)	**1** [byte]
13. LED frame – brightness	Enables adjusting the LED frame brightness	**0** – LED disabled **1 - 100** (1 - 100% brightness)	**100** (100%)	**1** [byte]
24. Buttons orientation	Enables reversing the operation of the buttons	**0** – default - the 1st button UP, the 2nd button DOWN **1** – reversed - the 1st button DOWN, the 2nd button UP	**0**	**1** [byte]
25. Outputs orientation	Enables reversing the operation of Q1 and Q2 without changing the wiring, for example, in case of invalid connection.	**0** – default (Q1 - UP, Q2 - DOWN) **1** – reversed (Q1 - DOWN, Q2 - UP)	**0**	**1** [byte]
30. Alarm configuration - 1st slot	Determines to which alarm frames and how the device should react. The parameters consist of 4 bytes, three most significant bytes are set according to the official the Z-Wave protocol specification.	• **1B [MSB]** – Notification Type • **2B** – Notification Status • **3B** – Event/State Parameters • **4B [LSB]** – action: **0x00** – no action on output **0xX1** – turn ON **0xX2** – turn OFF **0xX3** – turn ON/OFF continuously **0x0X** – no action on LED frame **0x1X** – LED frame blinks red **0x2X** – LED frame blinks green **0x4X** – LED frame blinks blue **0x8X** – disable LED frame **0xFX** – LED activate alarm sequence (red-white-blue)	**[0x00, 0x00, 0x00, 0x00]** (disabled)	**4** [bytes]
31. Alarm configuration - 2nd slot			**[0x05, 0xFF, 0x00, 0x00]** (Water Alarm, any notification, no action)	
32. Alarm configuration - 3rd slot			**[0x01, 0xFF, 0x00, 0x00]** (Smoke Alarm,any notification, no action)	
33. Alarm configuration - 4th slot			**[0x02, 0xFF, 0x00, 0x00]** (CO Alarm, any notification, no action)	
34. Alarm configuration - 5th slot			**[0x04, 0xFF, 0x00, 0x00]** (Heat Alarm, any notification, no action)	
35. Alarm configuration – duration	Defines duration of alarm sequence. When time set using this parameter elapses, an alarm is cancelled, LED frame and relay restore normal operation, but don't recover state from before the alarm.	**0** – infinite **1 - 32400** (1 s - 9 h, 1 s step) – duration	**600** (10min)	**2** [byte]
40. First button – scenes sent	Determines which actions result in sending scene IDs assigned to them. Values can be combined (e.g. 1+2=3 means that scenes for single and double click are sent). Enabling scenes for triple click disables entering the device in learn mode by triple clicking.	**1** – Key pressed 1 time **2** – Key pressed 2 times **4** – Key pressed 3 times **8** – Key hold down and key released	**0** (no scenes)	**1** [byte]
41. Second button – scenes sent				
60. Power reports – include self-consumption	Determines whether the power measurements for Endpoint 1 should include power consumed by the device itself	**0** – Self-consumption not included **1** – Self-consumption included	**0** (not included)	**1** [byte]
61. Power reports for first channel– on change	Defines minimal change (from the last reported) in measured power that results in sending new report. For loads under 50 W the parameter is irrelevant, report is sent every 5 W change.	**0** – reporting on change disabled **1 - 500** (1 - 500%, 1% step) – minimal change	**15** (15%)	**2** [bytes]

Table 7 - Walli Roll-Control - Advanced parameters				
Parameter	**Description**	**Available setting**	**Default setting**	**Parameter size**
62. Power reports for first channel– periodic	Defines reporting interval for measured power. Periodic reports are independent from changes in value (parameter 61).	**0** – periodic reports disabled **30 - 32400** (30 s - 9 h, 1 s step) – time interval	**3600** (1h)	**2** [bytes]
65. Energy reports for first channel – on change	Defines minimal change (from the last reported) in measured energy that results in sending new report.	**0** – reporting on change disabled **1 - 500** (0.01 - 5 kWh, 0.01 kWh step) – minimal change	**10** (0.1 kWh)	**2** [bytes]
66. Energy reports for first channel – periodic	Defines reporting interval for measured energy. Periodic reports are independent from changes in value (parameter 65).	**0** – periodic reports disabled **30 - 32400** (30 s - 9 h, 1 s step) – time interval	**3600** (1h)	**2** [bytes]
150. Force calibration	By setting this parameter to 2 the device enters the calibration mode. The parameter relevant only if the device is set to work in positioning mode (parameter 151 set to 1 or 2).	**0** – device isn't calibrated **1** – device is calibrated **2** – force device calibration	**0**	**1** [byte]
151. Operating mode	Enables adjusting operation according to the connected device	**1** – roller blind (with positioning) **2** – Venetian blind (with positioning) **5** – roller blind with built-in driver **6** – roller blind with built-in driver (impulse)	**1**	**1** [byte]
152. Venetian blind – time of full turn of the slats	For Venetian blinds (parameter 151 set to 2) the parameter determines time of full turn cycle of the slats. The parameter is irrelevant for other modes.	**0 - 65535** (0 - 655.35 s, every 0.01 s) - time of turn	**150** (1.5 seconds)	**4** [bytes]
153. Set slats back to previous position	For Venetian blinds (parameter 151 set to 2) the parameter determines slats positioning in various situations. The parameter is irrelevant for other modes.	**0** – slats return to previously set position only in case of the main hub operation **1** – slats return to previously set position in case of the main hub operation, momentary switch operation, or when the limit switch is reached **2** – slats return to previously set position in case of the main hub operation, momentary switch operation, when the limit switch is reached or after receiving the Switch Multilevel Stop control frame	**1**	**1** [byte]
154. Delay motor stop after reaching end switch	Determines the time after which the motor is stopped after end switch contacts are closed.	**1 - 255** (0.1s - 25.5 seconds)	**10** (1 second)	**2** [bytes]
155. Motor operation detection	Power threshold interpreted as reaching a limit switch.	**1 - 255** (1 - 255 W) - report interval **0** - no detection	**10** (10W)	**2** [bytes]
156. Time of up movement	Determines the time needed for roller blinds to reach the top. For modes with positioning the value is set automatically during calibration, otherwise, it needs to be set manually.	**1 - 65535** (0.01 - 655.35 seconds)	**6000** (60 seconds)	**4** [bytes]
157. Time of down movement	This parameter determines the time needed for roller blinds to reach the bottom. For modes with positioning the value is set automatically during calibration, otherwise, it needs to be set manually.			

12 Z-WAVE SPECIFICATION

Endpoint 1:
Generic Device Class: GENERIC_TYPE_SWITCH_MULTILEVEL
Specific Device Class: SPECIFIC_TYPE_CLASS_B_MOTOR_CONTROL
Description: control up/down

Endpoint 2:
Generic Device Class: GENERIC_TYPE_SWITCH_MULTILEVEL
Specific Device Class: SPECIFIC_TYPE_CLASS_B_MOTOR_CONTROL
Description: control tilt.

Switch Multilevel Command Class values refers to:

- 0x00 - fully close
- 0x63 - fully open

Table 8 - Walli Roll-Control - Supported Command Classes

No.	Command Class	Version	Secure
1.	COMMAND_CLASS_ZWAVEPLUS_INFO [0x5E]	V2	
2.	COMMAND_CLASS_SWITCH_MULTILEVEL [0x26]	V4	YES
3.	COMMAND_CLASS_ASSOCIATION [0x85]	V2	YES
4.	COMMAND_CLASS_MULTI_CHANNEL_ASSOCIATION [0x8E]	V3	YES
5.	COMMAND_CLASS_ASSOCIATION_GRP_INFO [0x59]	V2	YES
6.	COMMAND_CLASS_TRANSPORT_SERVICE [0x55]	V2	
7.	COMMAND_CLASS_VERSION [0x86]	V2	YES
8.	COMMAND_CLASS_MANUFACTURER_SPECIFIC [0x72]	V2	YES
9.	COMMAND_CLASS_DEVICE_RESET_LOCALLY [0x5A]	V1	YES
10.	COMMAND_CLASS_POWERLEVEL [0x73]	V1	YES
11.	COMMAND_CLASS_SECURITY [0x98]	V1	
12.	COMMAND_CLASS_SECURITY_2 [0x9F]	V1	
13.	COMMAND_CLASS_SUPERVISION [0x6C]	V1	
14.	COMMAND_CLASS_METER [0x32]	V3	YES
15.	COMMAND_CLASS_CONFIGURATION [0x70]	V1	YES
16.	COMMAND_CLASS_CRC_16_ENCAP [0x56]	V1	
17.	COMMAND_CLASS_NOTIFICATION [0x71]	V8	YES
18.	COMMAND_CLASS_PROTECTION [0x75]	V2	YES
19.	COMMAND_CLASS_MULTI_CHANNEL [0x60]	V4	YES
20.	COMMAND_CLASS_CENTRAL_SCENE [0x5B]	V3	YES
21.	COMMAND_CLASS_FIRMWARE_UPDATE_MD [0x7A]	V4	YES
22.	COMMAND_CLASS_APPLICATION_STATUS [0x22]	V1	
23.	COMMAND_CLASS_BASIC [0x20]	V1	YES

Table 9 - Walli Roll-Control - Multichannel Command Class			
No.	**Command Class**	**Version**	**Secure**
Endpoint 1			
1.	COMMAND_CLASS_ZWAVEPLUS_INFO [0x5E]	V2	
2.	COMMAND_CLASS_SWITCH_MULTILEVEL [0x26]	V4	YES
3.	COMMAND_CLASS_ASSOCIATION [0x85]	V2	YES
4.	COMMAND_CLASS_MULTI_CHANNEL_ASSOCIATION [0x8E]	V3	YES
5.	COMMAND_CLASS_ASSOCIATION_GRP_INFO [0x59]	V2	YES
6.	COMMAND_CLASS_SECURITY [0x98]	V1	
7.	COMMAND_CLASS_SECURITY_2 [0x9F]	V1	
8.	COMMAND_CLASS_SUPERVISION [0x6C]	V1	
9.	COMMAND_CLASS_METER [0x32]	V3	YES
10.	COMMAND_CLASS_NOTIFICATION [0x71]	V8	YES
11.	COMMAND_CLASS_APPLICATION_STATUS [0x22]	V1	
Endpoint 2			
12.	COMMAND_CLASS_ZWAVEPLUS_INFO [0x5E]	V2	
13.	COMMAND_CLASS_SWITCH_MULTILEVEL [0x26]	V4	YES
14.	COMMAND_CLASS_ASSOCIATION [0x85]	V2	YES
15.	COMMAND_CLASS_MULTI_CHANNEL_ASSOCIATION [0x8E]	V3	YES
16.	COMMAND_CLASS_ASSOCIATION_GRP_INFO [0x59]	V2	YES
17.	COMMAND_CLASS_SECURITY [0x98]	V1	
18.	COMMAND_CLASS_SECURITY_2 [0x9F]	V1	
19.	COMMAND_CLASS_SUPERVISION [0x6C]	V1	
20.	COMMAND_CLASS_METER [0x32]	V3	YES
21.	COMMAND_CLASS_APPLICATION_STATUS [0x22]	V1	

The device uses Notification Command Class to report different events to the hub (“Lifeline” group).

Table 10 - Walli Roll-Control - Notification Command Class				
Notification Type	**Event**	**Parameter**	**Status**	**In endpoints**
Power Management [0x08]	Over-current detected [0x06/V3]		0xFF – enable (non-changeable)	Root, Endpoint 1
System [0x09]	System hardware failure with manu-facturer proprietary failure code [0x03]	MP code: 0x01 [device overheat]	0xFF – enable (non-changeable)	Root, Endpoint 1

Protection Command Class enables preventing local or remote control of the outputs.

Table 11 - Walli Roll-Control - Protection Command Class			
Type	**State**	**Description**	**Hint**
Local	0	Unprotected - The device isn't protected, and may be operated normally with the user interface.	Inputs connected with outputs.
Local	2	No operation possible – button cannot change relay state, any other functionality is available (menu).	Inputs disconnected from outputs.
RF	0	Unprotected - The device accept and respond to all RF Commands.	Outputs can be controlled with Z-Wave.
RF	1	No RF control – command class basic and switch binary are rejected, every other command class is handled.	Outputs can't be controlled with Z-Wave.

Table 12 - Walli Roll-Control - Meter Command Class				
Meter Type	**Scale**	**Rate Type**	**Precision**	**Size**
Electric [0x01]	Electric_kWh [0x00] (default)	Import [0x01]	2	4
Electric [0x01]	Electric_W [0x02]	Import [0x01]	1	2

13 PARTS COMPATIBILITY

Table 13 - Walli Roll-Control - Available Nice parts		
Name	**Symbol**	**Included in Walli Roll-Control**
Walli Roller Shutter Unit	FG-WREU111-AS-8001	x
Switch Button Adapter	FG-WDSEU221-PP-0007	
Mounting Frame NICE/G55	FG-Wx-AS-4001	x
Mounting Frame LC	FG-Wx-AS-4002	
Mounting Frame SO	FG-Wx-AS-4003	
Switch Button with Lightguide (white)	FG-WDSEU221-AS-8100	x
Single Cover Plate (white)	FG-Wx-PP-0001	x
Double Cover Plate (white)	FG-Wx-PP-0003	
Triple Cover Plate (white)	FG-Wx-PP-0004	

Table 14 - Walli Roll-Control - Required Nice parts for G55 (only with non-metalised outer surface: Standard 55, E2, Event, Event Clear) covers	
Name	**Symbol**
Walli Roller Shutter Unit	FG-WREU111-AS-8001
Switch Button Adapter	FG-WDSEU221-PP-0007
Mounting Frame NICE/G55	FG-Wx-AS-4001

Table 15 - Walli Roll-Control - Required Nice parts for LC selected covers	
Name	**Symbol**
Walli Roller Shutter Unit	FG-WREU111-AS-8001
Switch Button Adapter	FG-WDSEU221-PP-0007
Mounting Frame LC	FG-Wx-AS-4002

Table 16 - Walli Roll-Control - Required Nice parts for SO selected covers	
Name	**Symbol**
Walli Roller Shutter Unit	FG-WREU111-AS-8001
Mounting Frame SO	FG-Wx-AS-4003

14 PRODUCT DISPOSAL

This product is an integral part of the automation and therefore must be disposed together with the latter. At the end of the product lifetime, the disassembly and scrapping operations must be performed by qualified personnel.
This product is made of various types of material, some of which can be recycled while others must be scrapped. Seek information on the recycling and disposal systems envisaged by the local regulations in your area for this product category.



As indicated by the symbol alongside, disposal of this product in domestic waste is strictly prohibited. Separate the waste into categories for disposal, according to the methods envisaged by current legislation in your area, or return the product to the retailer when purchasing a new version.

⚠ CAUTION!

- Some parts of the product may contain pollutant or hazardous substances which, if disposed of into the environment, may cause serious damage to the environment or physical health.
- Local legislation may envisage serious fines in the event of abusive disposal of this product.

15 DECLARATION OF CONFORMITY

Hereby, Nice S.p.A., declares that the radio equipment type Walli Roll-Control is in compliance with Directive 2014/53/EU. The full text of the EU Declaration of Conformity is available at: http://www.niceforyou.com/en/support.

IS0981A00EN_07-07-2026

Nice SpA
Oderzo TV Italia
info@niceforyou.com